22.00.025

APPROVED RK

DRS22 SYSTEM

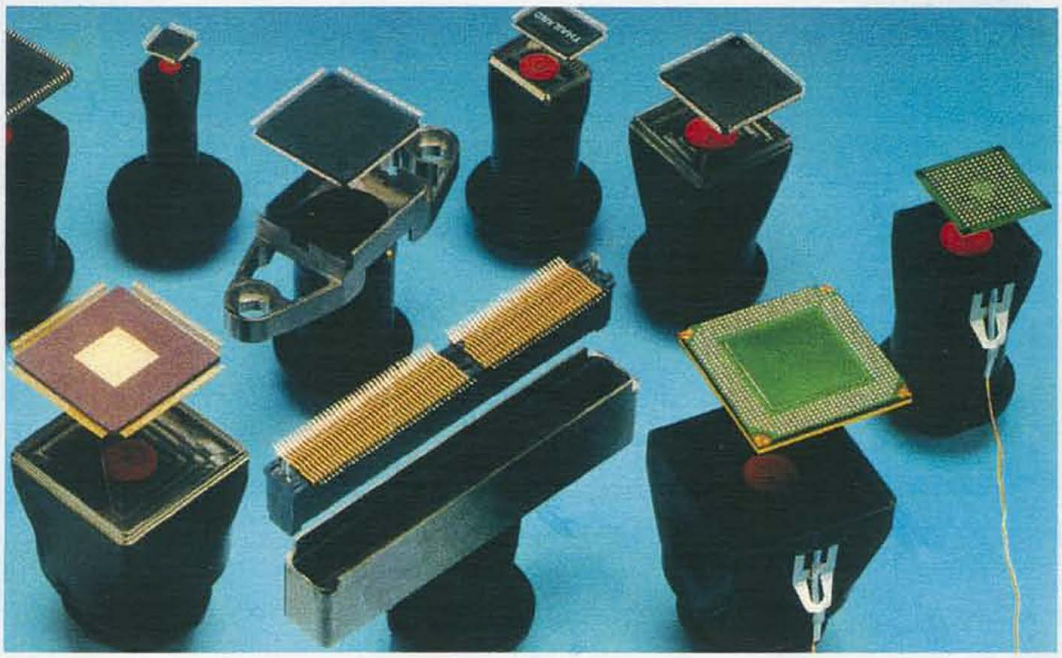

OPERATING MANUAL - Version 3.22

AIR-VAC

30 Progress Avenue, Seymour, Connecticut 06483
Phone (203) 888-9900 - Telefax (203) 888-1145

INDEX

Section	Description
1	Quick Start
2	Calibration
3	Hardware Overview
4	Software Users Manual
5	Process Tips
6	Maintenance
7	Schematics
8	Spare Parts & Accessories
9	Appendix

TABLE OF CONTENTS

1. QUICK START

Optional Workstation Assembly 1-1

Removing Shipping Brackets 1-7

Microscope and Camera Assembly 1-9, 1-9A

Electrical/Pneumatic Set Up 1-10

2. CALIBRATION *2-1*

3. HARDWARE OVERVIEW *3-1*

4. SOFTWARE

License Agreement 4-1

Version 3.22A Release Notes 4-3

Network 4-4
Long File Name/Notepad 4-6
Bar Code 4-8
Extended Cycle Time 4-10
Automatic Graph Export 4-12
Graph Import 4-14
Check for Missing Control Thermocouple 4-17
Check for Failed Communciation 4-18
Cycle Counters 4-20
Check for Memory Usage 4-23
Thermocouple Sampling Rate 4-25
Double Diffuser Control Logic 4-26
Diffuser Idle 4-27
Optional Cooling Ring 4-28
User Defined Messages 4-29
Vision Calibration Screen 4-31
Unlimited Photo Storage 4-32
(Multimedia Option)
Directory Maintenance 4-33
New Set Up Screens 4-34

Software Users Manual

Windows Interface Summary 4-35

Operator

- Registration/Reset 4-37
- Maintenance 4-38

Password 4-41

New/Open Edit

- General 4-43
- Multimedia 4-44

Teach

- General 4-45
- Printer Reports 4-49
- Thermocouple Control 4-50
  - *Contact Probes (K-type)* 4-50
  - *Non-Contact Probes (I/R type)* 4-50

Save

- General 4-54
- Profile Linking 4-55
- Multimedia Linking 4-55

Disk Utilities

- Backup 4-57
- Restore 4-59

Open Profile

- General 4-61
- Directories 4-62

Manual

- General 4-63
- Multimedia 4-64
- Speech (Voice) 4-65

Run Option

- General 4-66
- Multimedia 4-68
- Printer Report 4-68
- Speech (Voice) 4-69

Export Data 4-70

Import Data 4-72

Setup

- DRS22 4-75
- Graph 4-79
- Speech (Voice) Introduction 4-80

Delete Profile

- Trashcan File 4-81

History File 4-82

Error File 4-83

About 4-84

Multimedia 4-85

Helpful Hints 4-89

Troubleshooting 4-90

5.	***PROCESS TIPS***	5-1
6.	***MAINTENANCE***	
	Maintencance Checklist and Schedule	6-1
	LED Sensor Adjustment	6-4
	Upper Heating Element Replacement	6-5
	Temperature Controller Board Replacement	6-6
	Z-Axis Friction Adjustment	6-7
	Vacuum System	6-8
	Y-Bearing Adjustment	6-9
	Diffuser Leveling	6-10
	Carrier Leveling	6-11
7.	***SCHEMATICS***	*7-1*
8.	***PARTS AND ACCESSORIES***	*8-1*
9.	***APPENDIX***	*9-1*

Quick Start

- **DRS22 Machine.**

Step 1 (Non-Diffuser Machine): **Remove** Shipping Brackets.

Note: The table brackets screws (A) must be replaced after the bracket is removed. Be sure to save the bracket.

Note: The table bracket and screws (B) must be removed and saved.

Note: All brackets and screws should be saved. If future shipping is required, these brackets ***MUST*** be reinstalled.

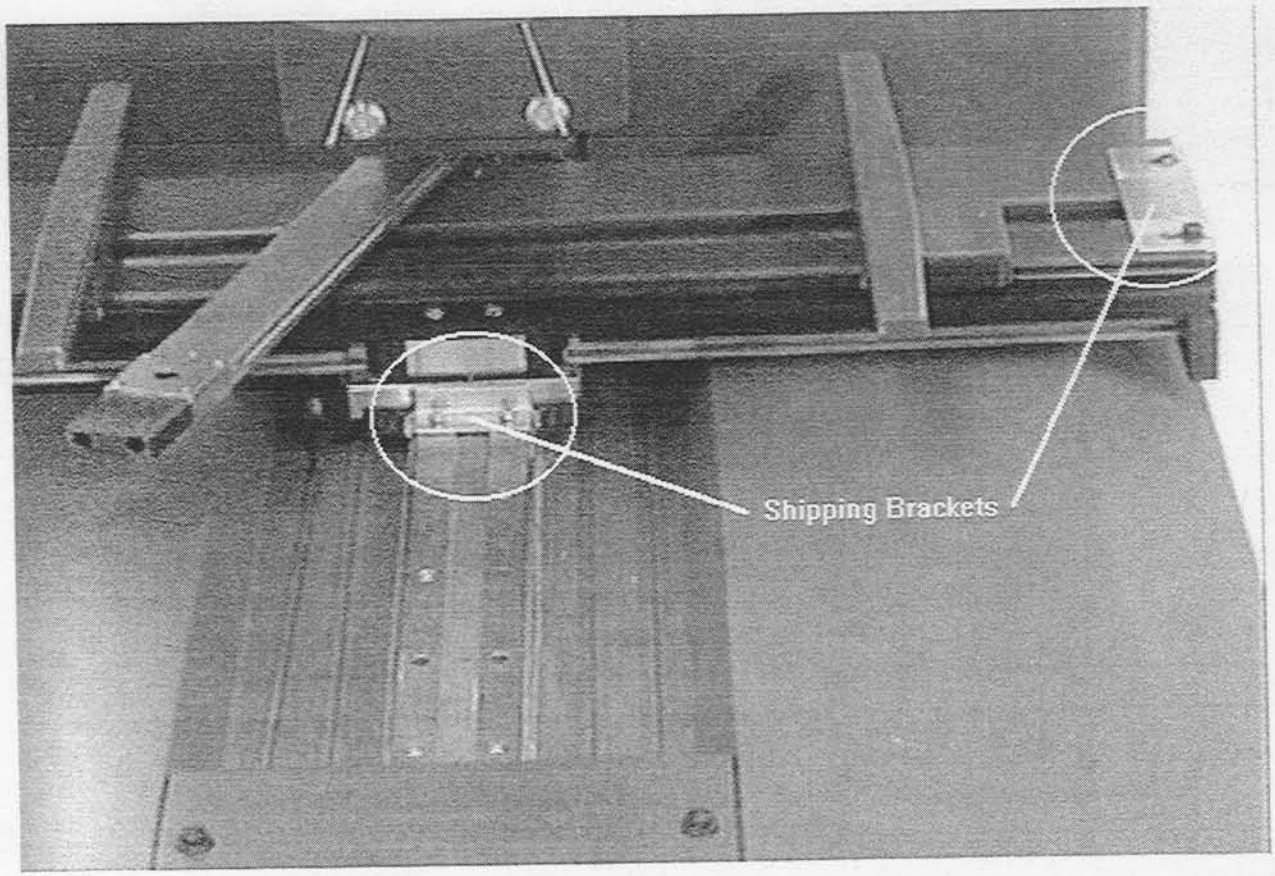

Step 1 (with diffuser - DF100 option): Table does not have any shipping brackets. Carefully remove the packing material (elastic bands) and unlock table.

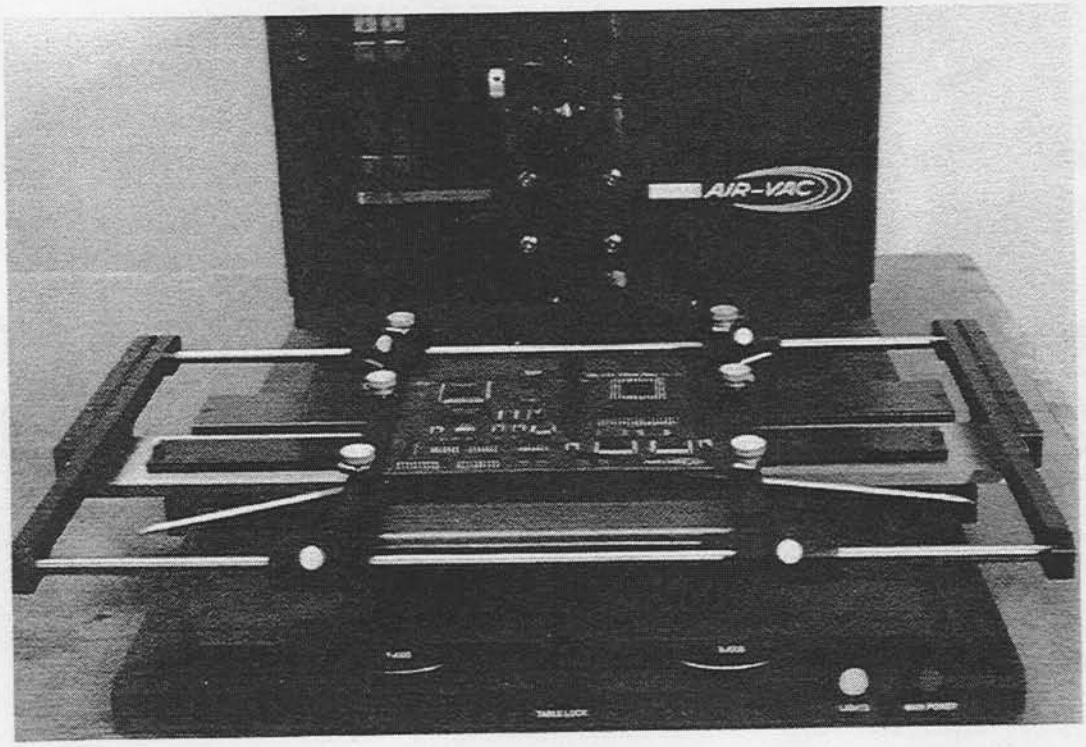

Note: Check table for wobble. If excessive wobble exists the table motion bearings may have loosened in shipment. Please refer to maintenance section of the manual for bearing adjustment procedures.

Step 2: **Mount** Microscope and Camera.

Before Microscope Installation

After Microscope Installation

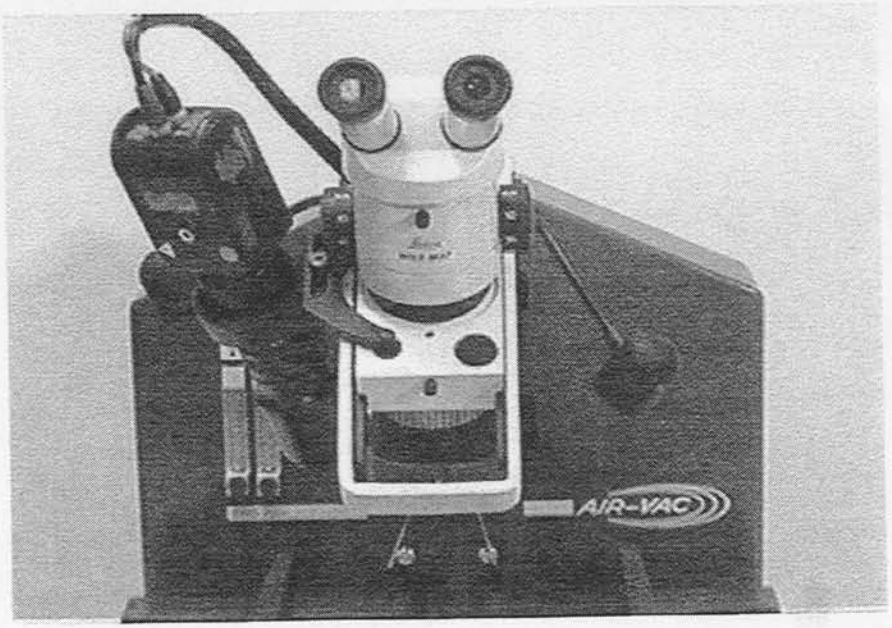

Note: Camera mounting and alignment details are found in the hardware section of this manual.

DRS 22 CAMERA INSLALLATION AND ALIGNMENT

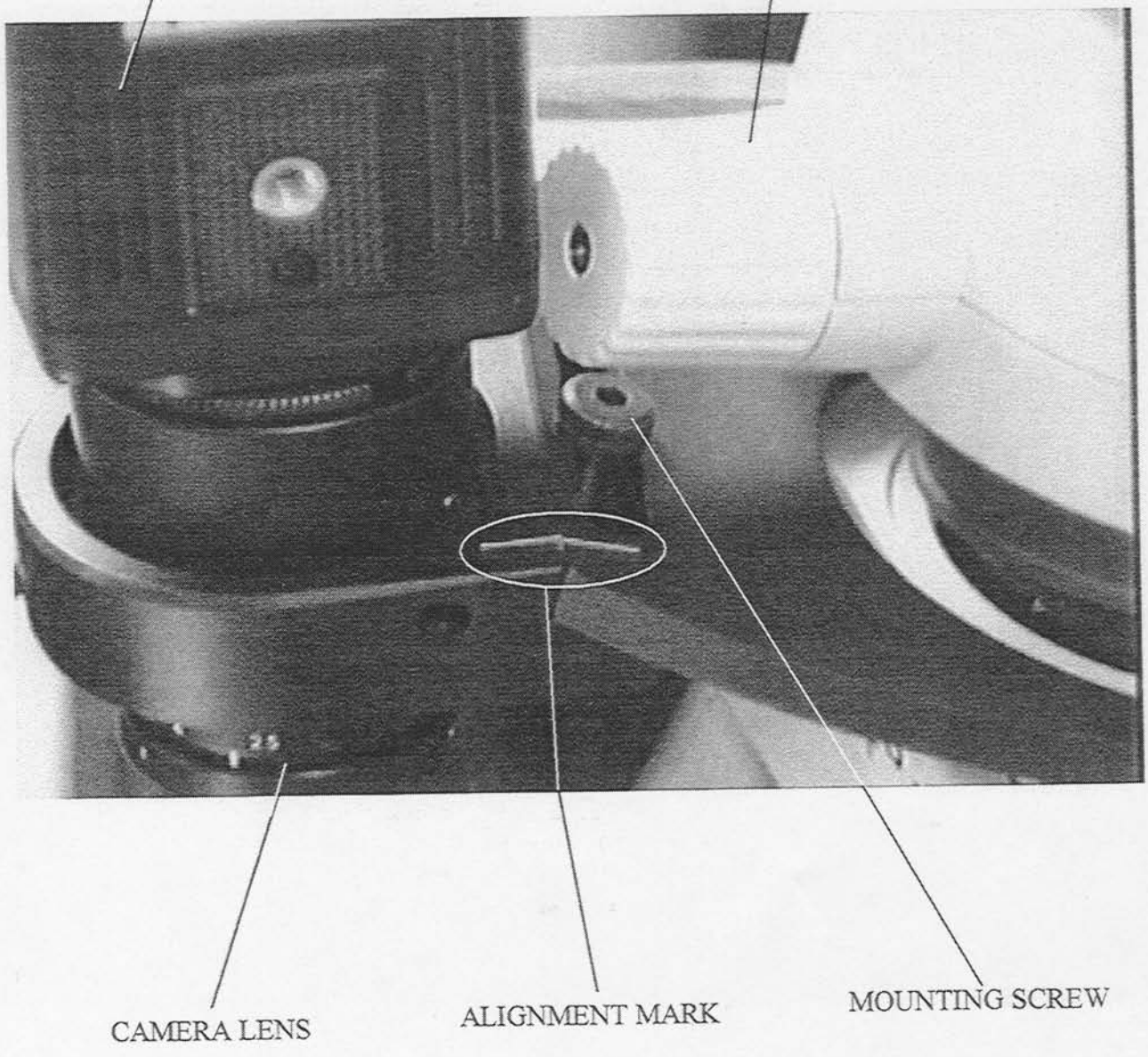

2/97

FACILITIES REQUIREMENTS FOR THE DRS22C (SOFTWARE AND SINGLE DIFFUSER)

Physical Requirements:

Machine Static dimensions (W x D x H) 24" x 45" x 25"

Machine Operating Dimensions (W x D x H) 45" x 45" x 25" (max travel)

Machine Weight: 157 lbs.

Slim Line PC w/VGA monitor, keyboard, mouse, speaker
(PC is additional work area)

Electrical Requirements:

Machine Power: 208-232 Vac, 50/60 Hz, Single Phase

2640 VA (12 amps @ 220V)

15 amp, 250V plug Nema #6-15P,

ANSI #C73.20, 2 pole, 3-wire

Computer Power: Monitor - 120 VAC 50/60 Hz, 2 amps
CPU - 120 VAC 50/60 Hz, 3 amps

Camera Power: 120 Vac power cube, 60 Hz, 120 mA

NOTE: A common earth ground is required for all AC connections (see DRS Technical Bulletin #104) (attached)

Air/Nitrogen Requirements:

Upper Heater: 60 - 90 psi, (3.0 scfm,consumption) clean, dry nitrogen or air source

Lower Heater: 60 - 90 psi, clean to 5 micron dry air source, (12.0 scfm intermittent, consumption)
1/8" Quick Disconnect Fitting

15 scfm total air required

Note: Portable air compressors cannot supply the continuous air flow required for this System.

Recommendations

-- A 6 outlet, 110V power strip will satisfy the computer and peripherals
-- Procure an operator chair that is quick-height adjustable with a span of approximately 16 to 26".

Facilities Requirements for the DRS22 system(w/Double Diffuser)

Physical Requirements:

Machine Static dimensions (Width x Depth x Height): 24" x 45" x 25"

Machine Operating Dimensions (W x D x H): 45" x 45" x 25" (max travel)

Machine Weight: 167 lbs.

Maximum Board Size: 17"W x 23"D

Slimline PC w\VGA monitor, keyboard, mouse, and speaker
(PC is additional bench area)

Electrical Requirements:

208-232 Vac, 50/60 Hz, single phase.

3960 VA (18 A x 220V)

20 amps, 250V plug, Nema 6-20P, 2 pole, 3wire

Computer power:	Monitor - 120Vac, 50/60 hz, 2 amps
	CPU - 120Vac, 50/60 hz, 3 amps
Camera power:	120Vac power cube, 60 hz, 125 mA

Air/Nitrogen Requirements:

Upper Heater--60-90psi, 3.0 scfm clean, dry nitrogen or air source

Lower Heater, venturi and diffuser--60-90 psi, clean, dry air source, 20.0 SCFM intermittent
Recommended 1/4" NPT fitting with a 3/8" min hose diameter

Note: Portable air compressors cannot supply the continuous air flow required for this System.

Recommendations

-- A 6 outlet, 110V power strip will satisfy the computer and peripherals
-- Procure an operator chair that is quick-height adjustable with a span of approximately 16" to 26".

Step 3: **Install Pneumatic connections:**(refer to DRS22 pnuematic block)

A. Compressed air for both top and bottom(diffuser) heaters
Connect compressed air line (80 PSI, Clean, Dry Air: Very Critical) to the quick disconnect fitting (A)

B. Compressed air for bottom and Nitrogen for top heater
Remove the 'T' fitting (B) connecting the upper and lower heater ports.

Connect compressed air line (80 PSI, Clean, Dry Air: Very Critical) to the bottom heater port (C) .

Connect the seperate Nitrogen compressed air feed line (80 PSI, Clean, Dry Air: Very Critical) to the upper heater port (D)

Step 4: **Install Electrical connections:** (refer to DRS22 Electrical Block Diagram)

A. Connect footswitch into the cycle start port on the DRS machine(E).

B. Setup the computer, keyboard and mouse(F,G). Connect 120V AC power to the computer (H).

C. Connect the 40 pin (2 row) long computer cable into the Digital I/O card at the rear of the PC. Connect the DB25 end of the long computer cable into the right hand side of the software box (I).

D. Connect the RS232 cable coming out from the diffuser control box to the serial port 'Com 2 or Serial B port (DB9 connector)on the rear of the PC (J) .

E. Connect the short computer cable (1 ½ foot, DB25 on both sides) between the left side of the software box and the DB25 connector on the DRS22(K) .

F. Camera and Multimedia Options. Connect the camera coax connector to the Grey coax cable on the coax octopus to DB25 cable (L). Connect DB25 end of the cable to the multimedia card in the rear of the PC (L). Connect 120V AC power to the camera module(Q).

Note: The computer monitor must be plugged into the HD15 connector on the back of the multimedia card instead of the standard monitor port (M). Connect 120V AC power to the monitor (N).

G. Sound card Speaker option. Connect the audio connector from the multimedia speaker to the speaker port on the sound card in the rear of the PC (O).

H. Connect the 220V AC power cord to the system (P).

I. Power up the PC and DRS system. The DRS must be powered up before the PC. Temperature control information will be lost unless this procedure is followed.

J. Check the Electronic flow meter, Heater and thermocouple Calibration on the DRS system. See the calibration section of the manual for details.

DRS22 Pneumatic Block Diagram (rear view)

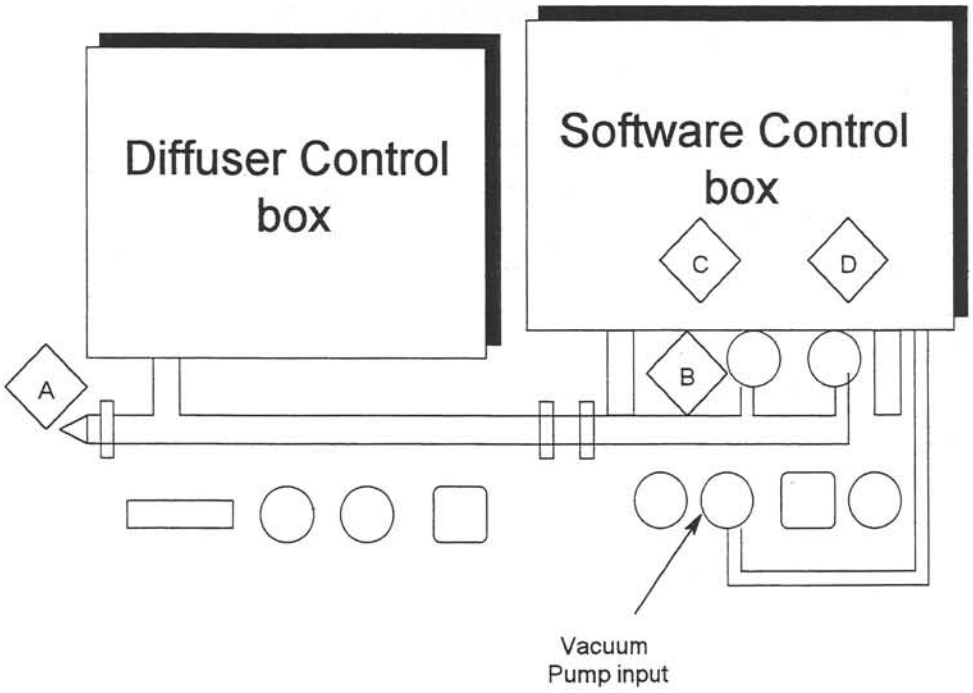

DRS22ps1.flo
9/30/96

DRS22 Electrical Block Diagram (rear view)

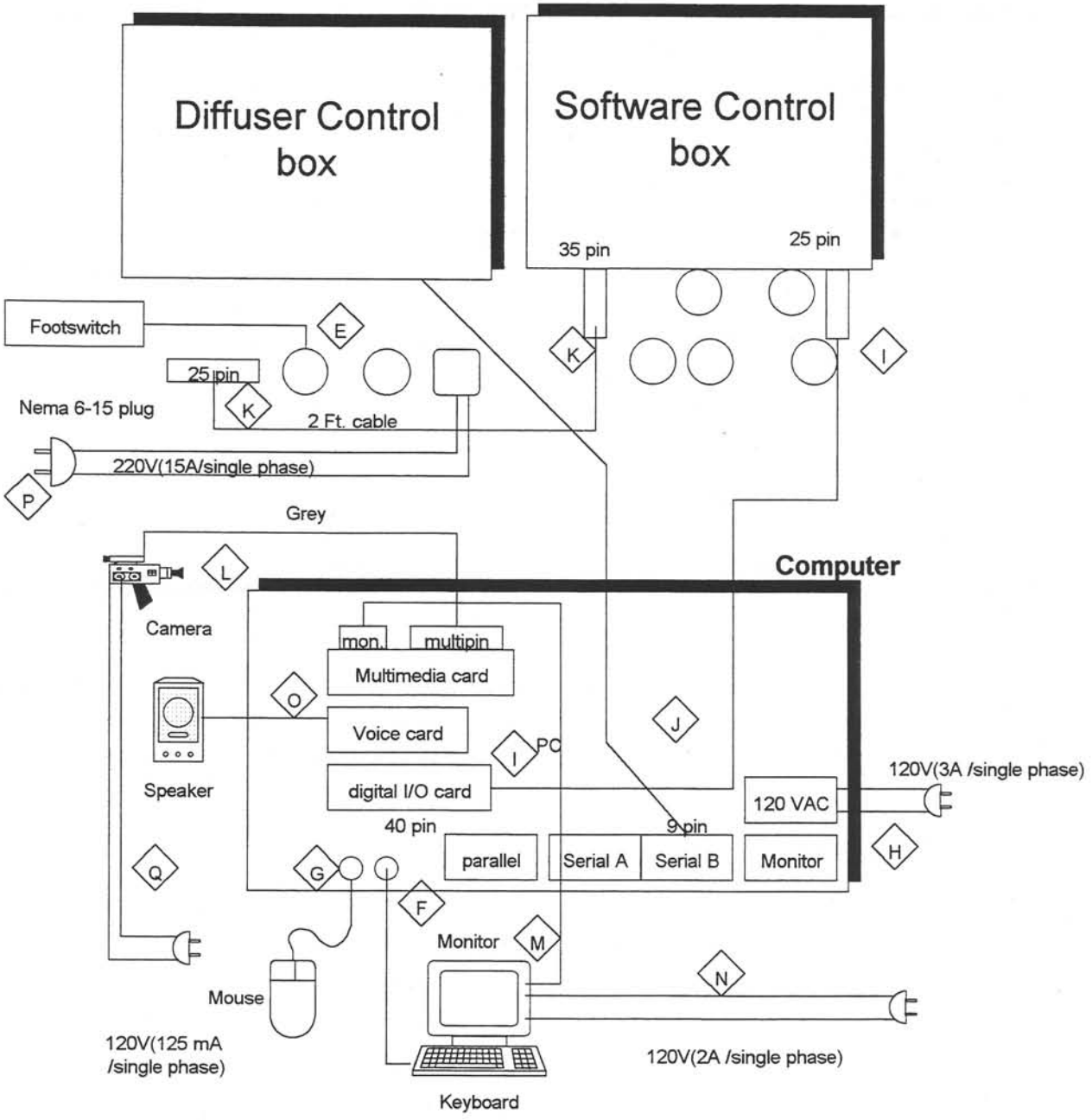

DRS22es1.flo
9/30/96

Verification Procedure

Standard Verification Procedures (with Diffuser option)

Note: All the Verification procedures described in this section have been performed by Air-Vac prior to shipment. We strongly recommend rechecking all Verification settings after the machine has been installed. Weekly Verification should be performed to keep your machine running at top performance.

Note: Recheck all Verification parameters if any of the following occurs:

1)The machine is moved for any reason. 2) If the input AC line has been changed/altered. This includes the 220V to the machine or the 110Vac to the computer. 3) If the input air line has changed. This includes change over from air to nitrogen on the upper heater.

Computer Controlled Machine Verification

- Factors that contribute to heating and flow rate variations.
  1. Pressure regulator.
  2. Software control parameters.

- Factors that contribute to alignment variations.
  1. Vision Cube.
  2. LED and sensor position.

- Verification Hardware (NCAL-3 kit, major components)
  1. Pressure gauge (included).
  2. Flow meter (included).
  3. Verification nozzle: NCAL-1 (included).
  4. Hand-held temperature meter (included). (Omega meter)
  5. Hand-held Verification meter (included). (Omega Calibrator)

- Verification procedure - *Pressure Regulators. (*Top and Bottom)
  1. Begin with the DRS22 machine and the computer powered ***OFF.*** Remove the back panel from the white software control box.

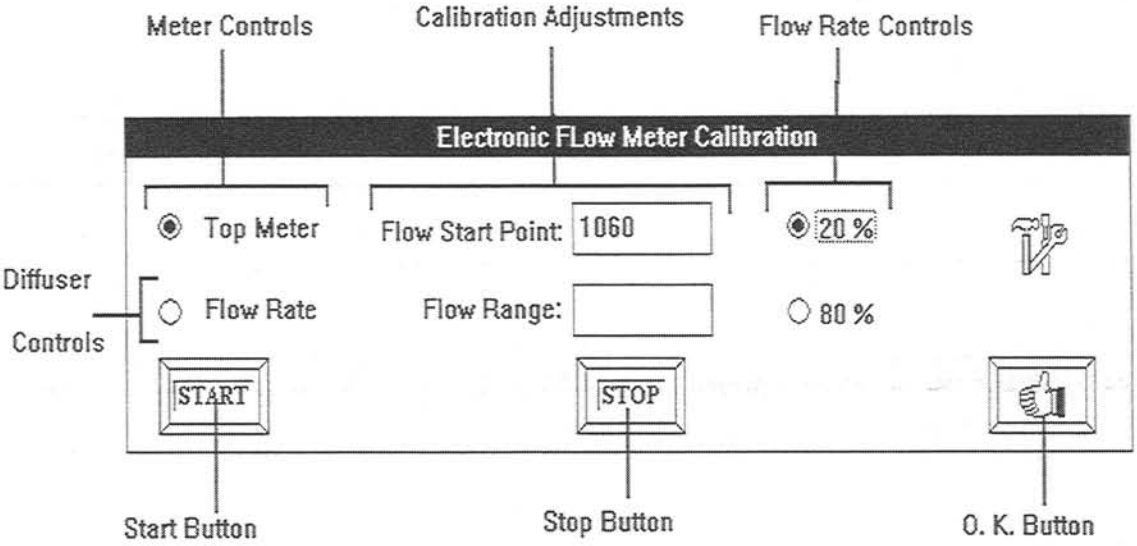

2. Power ***ON*** the computer.
3. Power ***ON*** the DRS22 machine.
4. Start up the DRS22 software.

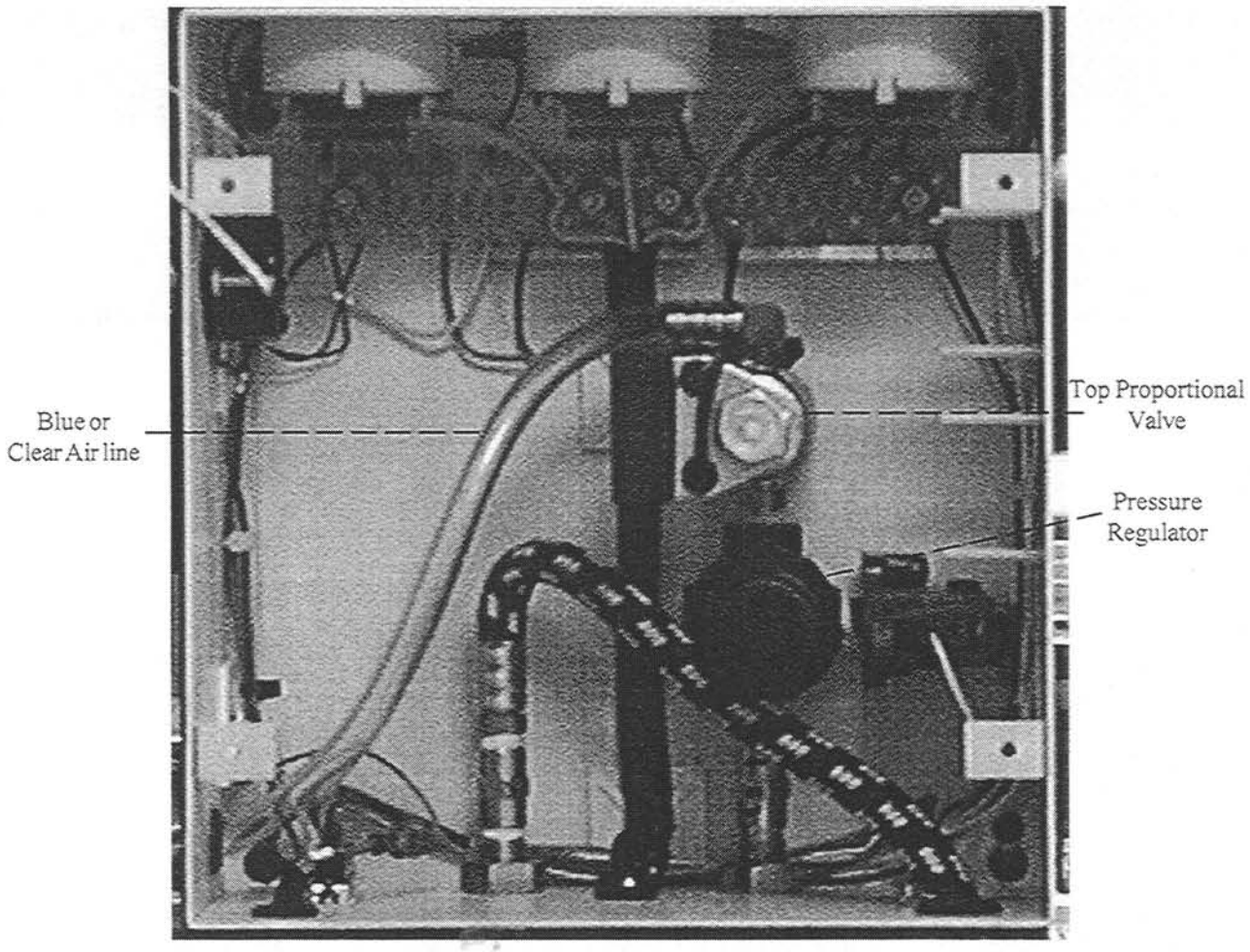

When viewing the DRS22 from the back, this is the right side single diffuser white box.

5. Run the ***Pre verification warm-up*** profile found in the Mainte nance directory of the profile library. The path to this directory is c:\windows\drs22\profiles\maint. This profile will run the top heater proportional valve to provide for a more repeatable verfication.

6. Select the **Electronic Flow Meters** option from the **Verification** menu. Select the **80 %** flow rate control and the **Top Meter** control.

7. Select the top proportional valve (located in the white control box) and disconnect the clear (or blue) air line from the top of this de vice. Connect the pressure gauge to this proportional valve output.

8. Click on the **Start** button to activate the air.

9. If the pressure gauge reads below or above 40 psi. Adjust the pressure regulator to 40 psi. Disconnect the gauge to relieve pressure and retest to insure reading accuracy.

Note: Incoming line presure should be 80 psi. This 40 psi reading is at the proportional valve.

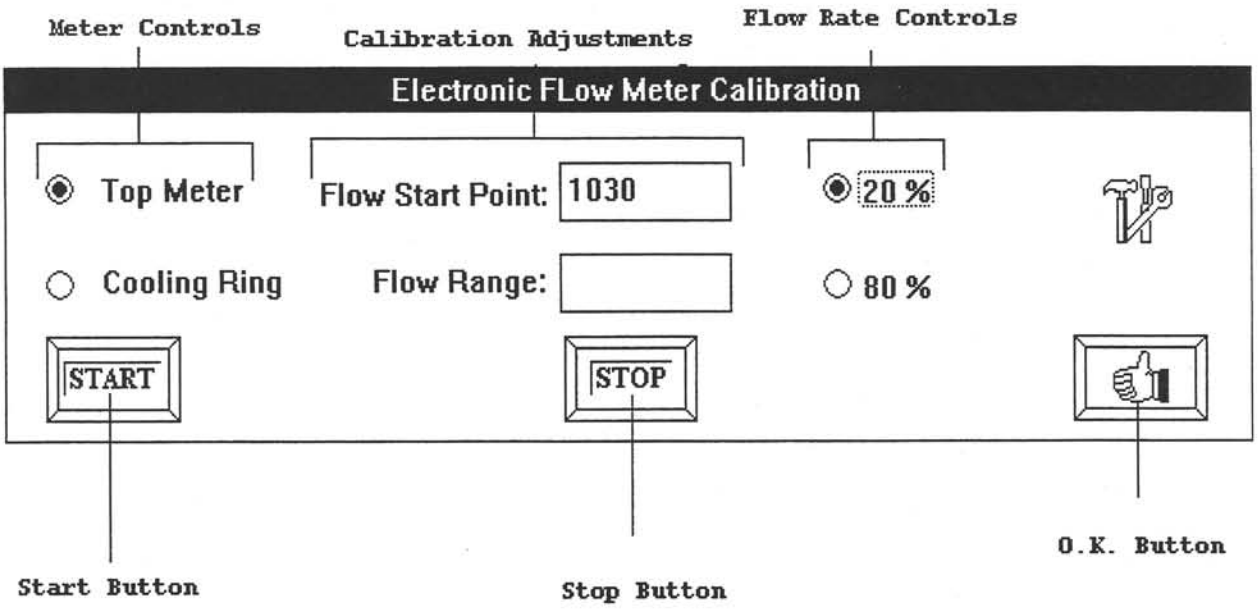

Important!

Be sure that the diffuser is not on in the idle mode during upper heater verification.

10. Click on the **Stop** button after the pressure regulator is set. Lock the pressure regulator by pressing inward on the adjustment knob.

• Verification procedure - *Electronic Flow Meters. (Top* heater only)

11. Connect the flow meter to the top proportional valve output.

Note: Do not connect the output of the flow meter to the heater input.

12. Select the **Electronic Flow Meters** option from the **Verification** menu. Select the **20 %** flow rate control.

13. Click on the **Start** button and read the Verification flow meter value. For a 20% flow rate the meter should settle out at the lower scribe line. ***Let flow stabilize for 30 seconds before taking the flow meter reading.***

14. If adjustments are required, click on the **Stop** button and adjust the **Flow Start Point** numerical value *down* if the reading is above the lower scribe line or *up* if the reading is below the lower scribe line.

Note: There is a resolution restriction associated with the proportional valves, and therefore, an exact flow meter reading may not be possible. Also there is a relationship between the low and high flow rate settings, Optimal setting in the low flow condition is advisable.

15. Select the **80 %** flow rate control.

16. Click on the **Start** button and read the flow meter value. For a 80% flow rate the meter should settle out at the upper scribe line

17. If adjustments are required, click on the **Stop** button and *increase* or *decrease* the value for the **Flow Range** parameter.

18. Adjusting the 20 % or 80% **Flow Range** parameter will change the other flow meter reading. A balance must be created between these two parameters until the 20% and 80% flow meter readings are as accurate as possible.

19. Reconnect the clear (or blue) hose (from the DRS22) to the proportional valve output.

20. Click on the **OK.** Button to save any adjustments.

21. Replace the back panel to the white software control box.

Note: Changes made during the electronic flow meter Verification saved automatically when you click on thumbs up .

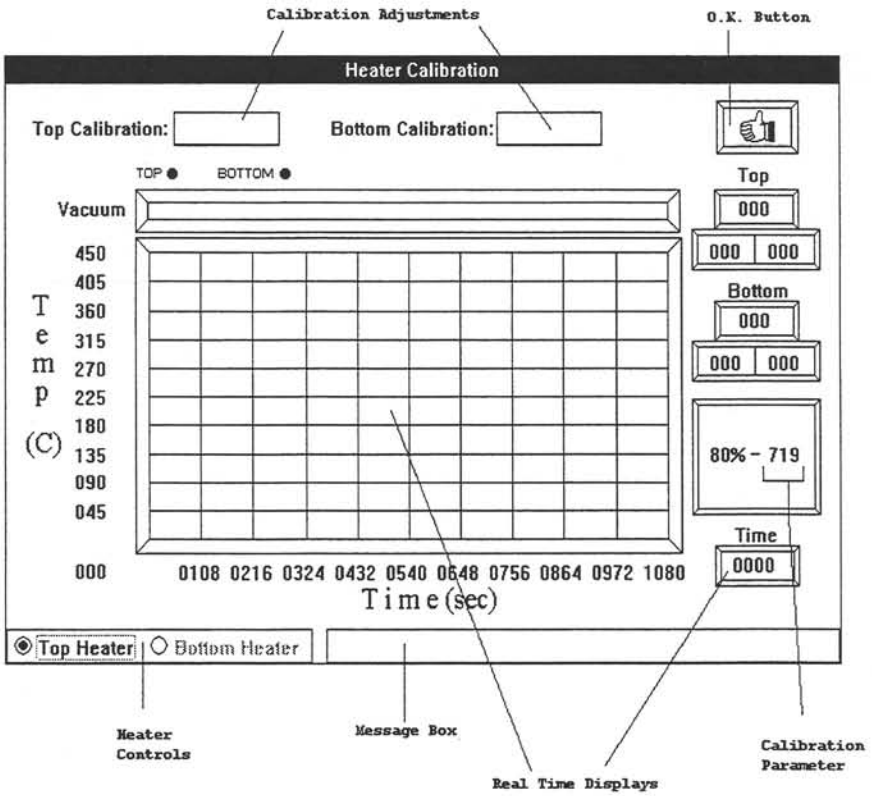

• Verification procedure - *Top Heater*

The heater verification must be run after the flow verification. If the heater and assembly is hot prior to running the verification the set values may not be consistent with operation values. If the heater verification must be run without first running the flow sequence, always run the pre verification warm-up program found in the c:\windows\drs22\profiles\maint directory.

22. Top Heater - Insert the Verification nozzle (NCAL-1) into the DRS22 machine and connect the thermocouple wire to a hand-held temperature meter.

23. Select the **DRS22 Heaters** option from the **Verification** menu.

Note: The DRS22 software has a speech (voice) option. This option can be used to ***TALK*** to the operator via the Event and Alert messages. If the Speech option is activated (**DRS22 Setup** option), then all messages will be converted from text to speech through the speech synthesizer card. If the speech option is not active the system will alert the operator by an audible tone.

24. Press on the footswitch to begin. The System will automatically cycle for 3 minutes before any adjustments are allowed (Nozzle preheat cycle).

Note: The total Verification cycle has 3 operational phases.

- Phase 1: Nozzle Preheat (3 minutes).
- Phase 2: Heater rampup and stabilization
- Phase 3: Heater Verification. (300C, 80% flow rate)

Note: No Verification changes will be allowed, until the heater Verification phase. If an additional heater Verification time is required, press the footswitch immediately following phase 3 completion. The Preheat and rampup phases will be skipped and the heater Verification phase will repeat.

Note: Follow all the instructions displayed in the message box.

25. After the preheat phase completes, compare the hand-held temperature meter reading to the reading displayed on the **Verification** screen. If adjustments are necessary (do not stop the cycle), *increment* or *decrement* the **Top Verification** parameter aprox. one unit per actual degree required. The actual meter reading should stabilize and demonstrate approximately a +/- 5°C accuracy. The temperature adjustment should be set to 300 C +10 C/- 0C tolerance.

Note: If the Run screen illustrates a sine wave curve that is failing to reach the set point,Turn off the diffuser idle this could cause oscilation. If that does not clear the condition, adjust the top and bottom heater over temperature protection potentiometers 20 turns clockwise (see hardware manual).

Note: This Verification phase operates in real-time, therefore, some temperature spikes may occur.

26. After the Verification adjustments are complete, press the foot switch to terminate the cycle.

• Verification procedure - *Cooling ring option*

27. Verification of the air pressure and flow to the optional Cooling ring will be similar to the upper heater Verification procedure. Select the Cooling ring meter control on the electronic flow Verification screen. Repeat steps 6-19 for the cooling ring proportional valve located in the white control box.

• Verification procedure - *Bottom Heater (diffuser)*

Note: The diffuser temperature is controlled by a closed loop, internally compensated unit. There is no routine Verification for the bottom heater. If the bottom heater is not operating reliably please contact your representative or an Air-Vac technical support person.

• Verification procedure - *Thermocouple Channels*

28. Select the **Thermocouple Channels 1-3** option from the **Verification** menu. Connect a hand-held Verification meter to channel #1 of the DRS22 machine and the temperature meter.

29. Click on the **T/C #1** control. Perform a quick check of ranges 90 - 210 C. If they are within +/-3 C no further adjustment is required.

30. Adjust the hand-held Verification meter to display a value in be tween the 30-60 degree C. Each temperature Verification range has an minimum and maximum value; be sure the hand-held Verification meter displays a value close to the maximum range value. Start at 60 C range and work up. Lower range setting adjustments will affect the higher range settings.

Note: If the current temperature verification range is 30-60 Deg C, then set the hand-held Verification meter display between 50-60 Deg C.

Note: Be sure the hand-held Verification meter display is greater than the minimum and less than the maximum value for the current Verification range.

31. Click in the **30-60 Deg C** edit box and *increment* or *decrement* the value until the computer display matches the hand-held Verification meter display.

32. The same procedure is used for each temperature Verification range.

33. After all the temperature ranges have been adjusted, the remaining thermocouple channels can be calibrated.

34. After all the thermocouple channels have been calibrated, click on the **OK.** Button to save all changes.

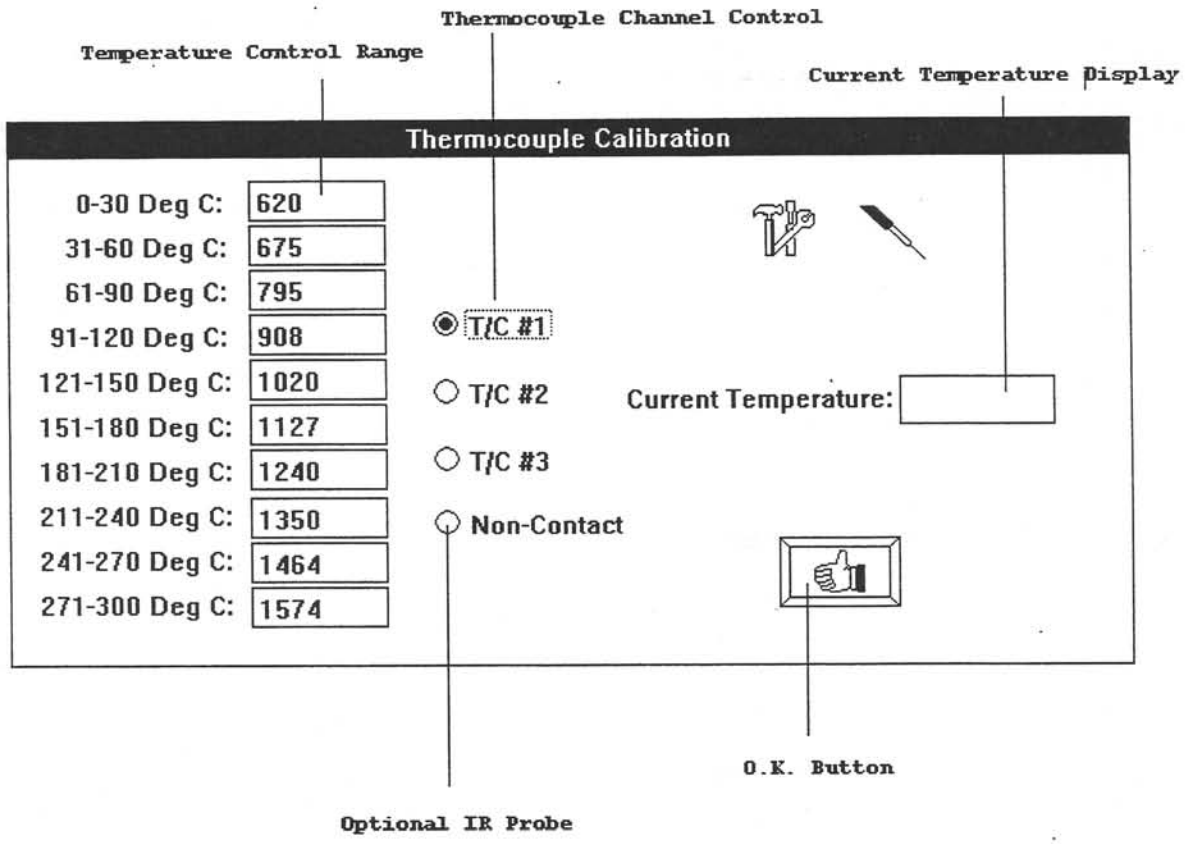

Important note: Do not change 0-30 Deg C range or set to a value of 600

Vision System Calibration

The LTP ® Beamsplitter Vision System is calibrated at Air-Vac prior to shipment. However, physical movement (such as shipping) and continual use require that the Vision System be periodically calibrated to insure placement accuracy.

1. Calibration should be performed with a Fine Pitch QFP Device. (i.e. QFP100, 160 or 208) and a bare board with matching site.
2. Verify the Calibration by first aligning the device in the vision cube and lowering it to the site. If the allignment is within 1/4 of a pad on three sides do not proceed to step 3.
3. Lower the nozzle and device just above the pads. Align the device one (1) side at a time (total of 3 sides) at board level using the X, Y and Theta adjustments.

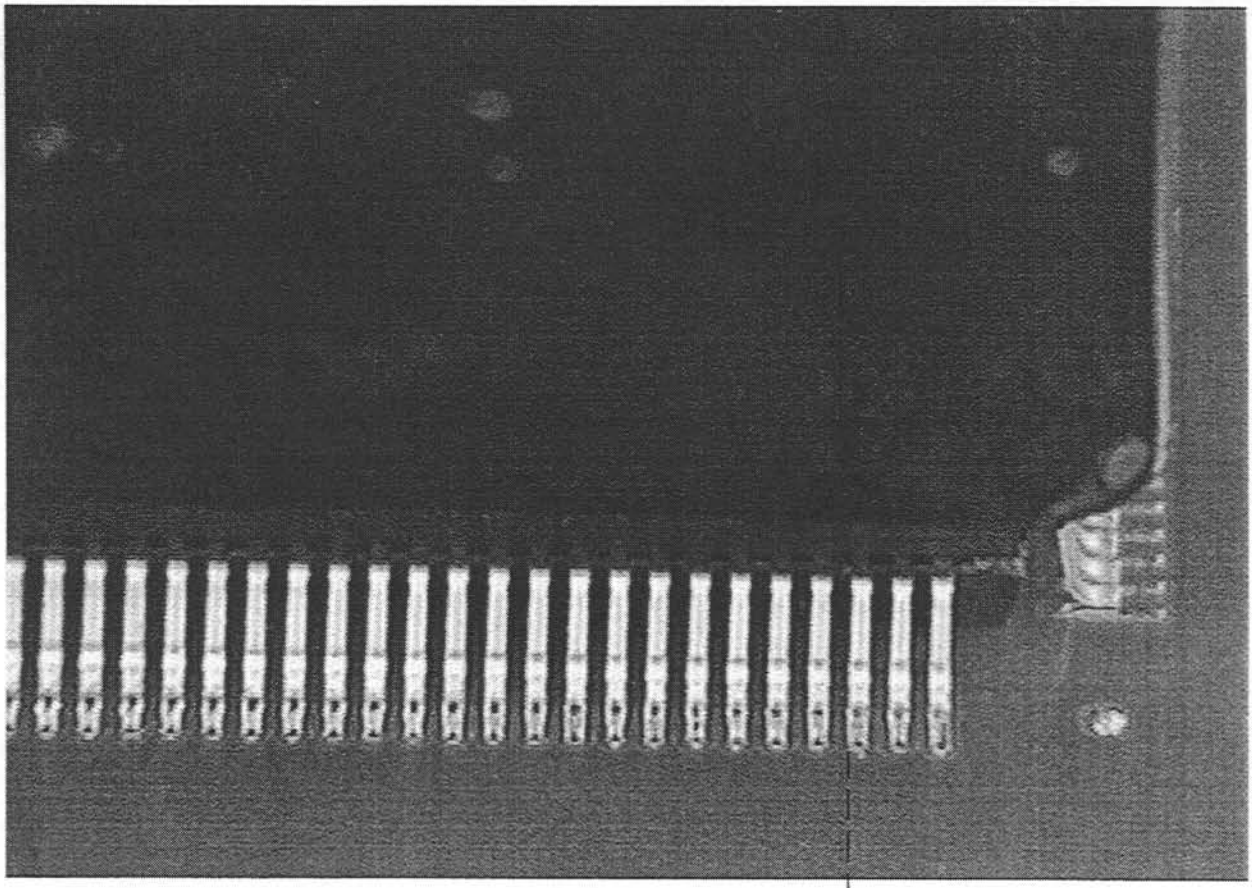

Board Level Alignment of Lead and Pad

4. Once the device is aligned at board level, lock the table to prevent movement.

5. • Raise the nozzle.
   • Extend the Vision Cube.
   • Trip the LED sensor and back it off slightly.
   • Rotate the optical focus ring until the image is clear

6. The device was aligned at board level. If the Vision Cube is properly calibrated, the device should also be aligned when viewing through the Vision Cube ***without making any X, Y or Theta adjustments***.

Caution: DO NOT MAKE ANY X, Y or THETA ADJUSTMENTS DURING THE CALIBRATION PROCEDURE ONCE THE VISION CUBE IS EXTENDED.

7. If the leads and pads are not aligned in the vision system after alignment at board level.

A. Check LED Setting:

Proper part alignment is optimized at one distance from the board. If they are correct, pad on the board and the bottom of lead are in focus at full zoom.

B. Check LED proceedure:

- Full zoom to one section of SMD leads and PCB pads
- Adjust the veticel movement to view lead pass through Pad.

at the point they are both at the same plane (same focal distance) the LED is set properly.

Note: Different setting may be required for BGA verses conventional leaded SMD components.

C. Adjust Cube alignment:

Loosen (but do not remove) the 1.5mm set screws which hold the two vision adjustment disks in place.

Rotate the disks until the part is aligned. Slowly and carefully retighten the set screws while continuing to view the alignment. This will insure that no movement of the cube occurs while tightening the screws.

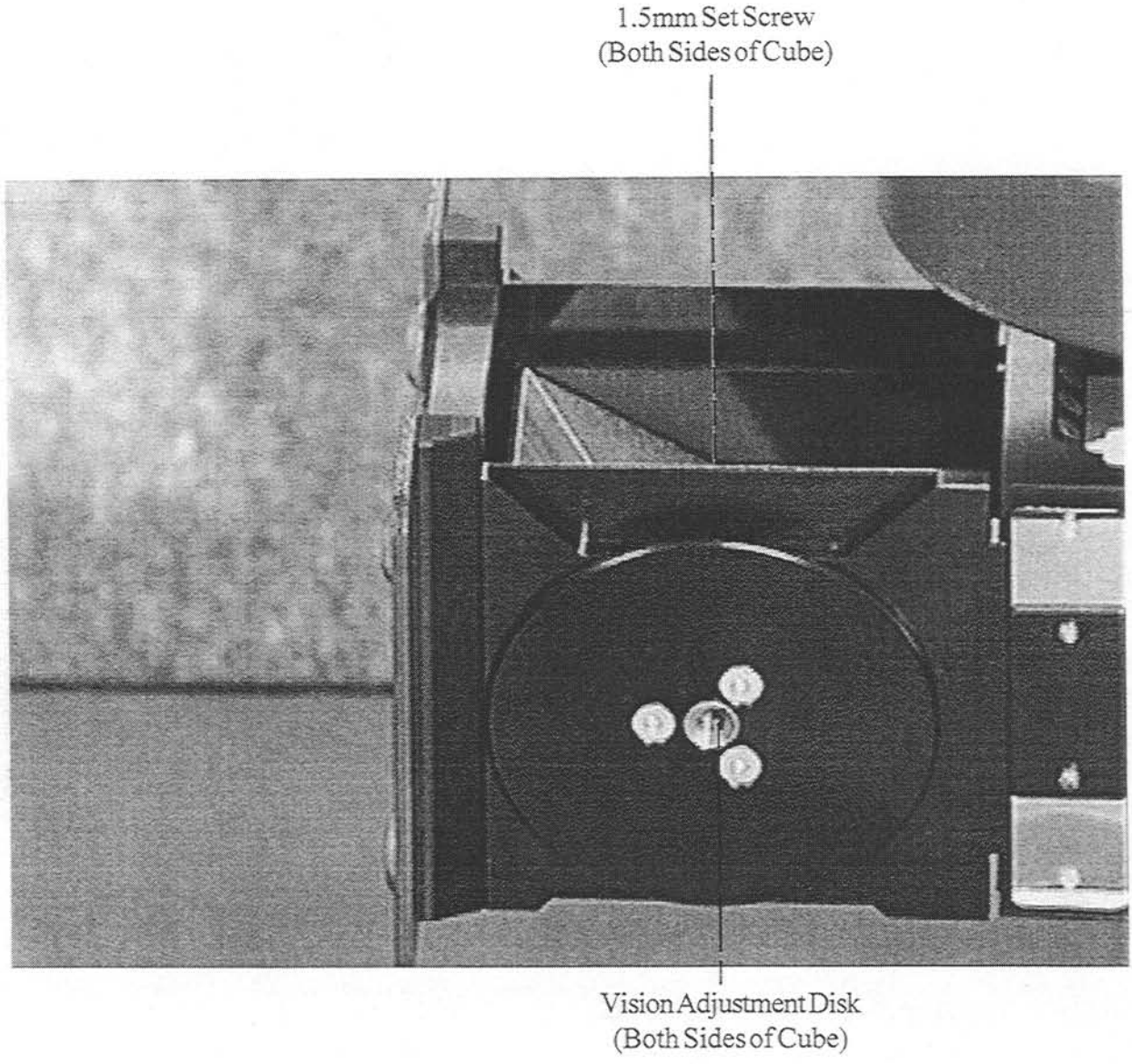

This Completes The Vision Calibration Process

Hardware Overview

Control Functions

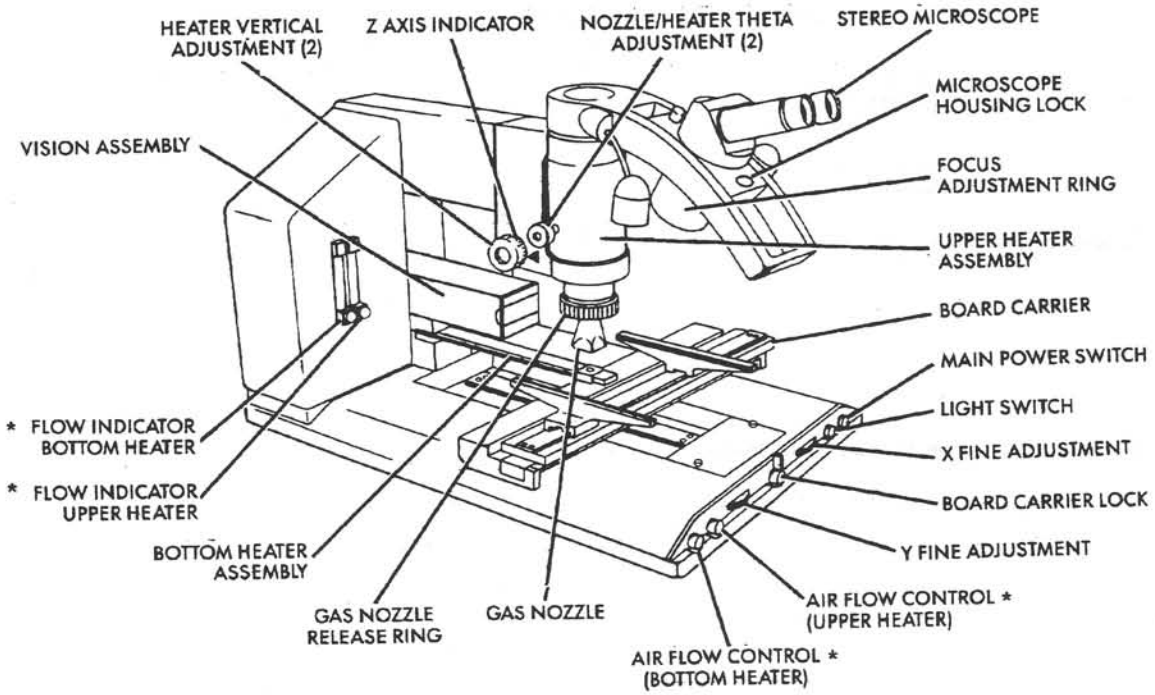

BOARD CARRIER SYSTEM:

Board Carrier Arms: Are spring-loaded and "v" grooved to support PCB.
X Fine Adjustment: Rotate to obtain precise positioning in the X axis (side-to-side)
Y Fine Adjustment: Rotate to obtain precise positioning in the Y axis (front to back)
Carrier Lock: Locking lever secures X and Y positions.

UPPER HEATER ASSEMBLY:

Heater Element: Heats gas of upper heater. Remote control regulates and sets temperature output.
Flow Rate Control (Upper Heater): Adjusts the gas flow through the flow indicator of upper heater.
Flow Indicator (Upper Heater): Displays amount of gas flow through the upper heater assembly. Scale indicates 10-100% of 2.2 scfm output.
Heater Vertical Adjustment Knobs: Raises and lowers nozzle and heater assembly. Total travel: 4 inches.
Nozzle/Heater Theta Adjustment Knobs: Nozzle and heater assembly rotates for proper theta alignment (+/-10°).
Z Axis Indicator: Records position of component height relative to PCB.
Gas Nozzle: Directs the air flow to the solder joints.
Nozzle Release Ring: Opens and closes clamping fingers of the heater assembly to allow insertion of the gas nozzle.

BOTTOM HEATER ASSEMBLY:

Heater Element: Heats gas of bottom heater. Remote control regulates and sets temperature output. A detent positions unit under the work area. Unit swings away when not in use to the left or right side.
* **Flow Rate Control (Bottom Heater):** Adjusts the gas flow through the flow indicator of bottom heater.
* **Flow Indicator (Bottom Heater):** Displays the amount of gas flow through the bottom heater assembly. Scale indicates 10-100% of 2.2 scfm output.

MICROSCOPE ASSEMBLY:

Stereo Microscope: Allows operator to view removal, alignment, and reflow process. Magnification (5X and 10X). Rotates 270° radially about the microscope mount.
Microscope Adjustment Button: Sets the viewing angle of the microscope housing between 60-45° axially.
Focus Adjustment Ring: Allows focus adjustment for the operator.
Light Switch: On/Off operates lights in microscope arm.

VISION ASSEMBLY:

Incorporates vision cube which superimposes the image of the component bottom and the surface of the PCB providing accurate alignment.

MAIN POWER SWITCH:

On/Off provides electrical power to all systems.

(*) Non-software based units only.

REAR VIEW OF DRS-22

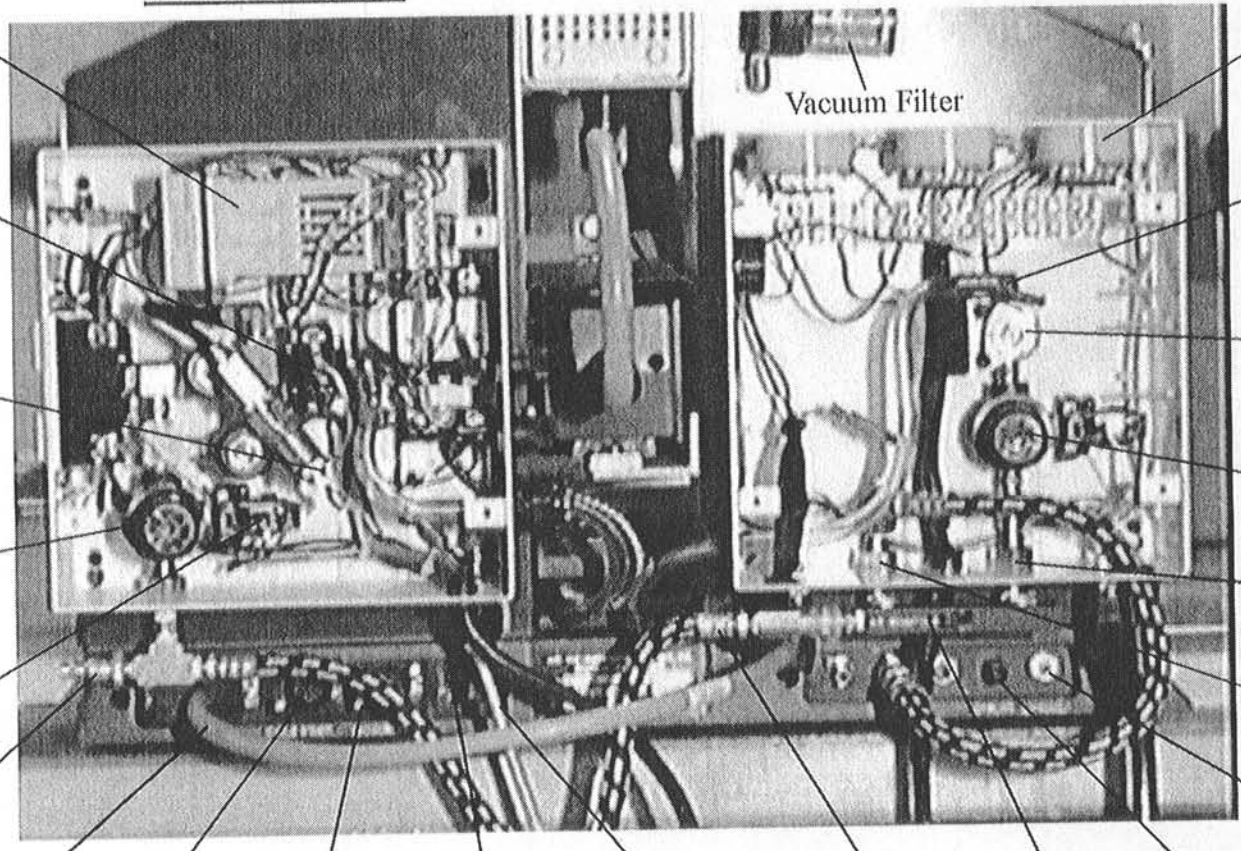

Diffuser Temperature Controller (Athena)

Low pressure switch

Needle Valve 3.0 SCFM

High flow Air Regulator 50 psi max

Switch, Low Pressure

Air In Supply - 1/4" line 60-90 psi clean dry air (5 microns)

RS232 Interface Cable

Foot Switch (Cycle Start)

Footswitch (Optional Nozzle Vacuum)

DRS 22 220V, 15A Power Line

9 Pin Computer Cable To I/O B- Diffuser Heat Control

Flexible Air Line

Air Manifold Block (Connects Upper Heater And Diffuser for Air)

Static Ground 1 Meg OHM

Thermocouple Chanels (3)

Calibration Fitting (Pressure & Flow)

Proportional Valve

Air Regulator 40psi

Nitrogen In Port

Air In Port

Vacuum Probe Parts Handling

***Note:**

To hook up Nitrogen for upper heater, remove flexible air line from manifold block. Remove manifold block from Software Control Box. Connect flexible air line to "Air In" Port on Software Box. Connect nitrogen to "Nitrogen In" on Software Box.

Stereo Microscope

- The stereo microscope conveys a parallax free image of the work area. It can be positioned 270° radially about the microscope mount and 60° to 45° axially on the microscope arm. The microscope housing lock secures the microscope in the support arm. A detent positions the microscope in the front of the unit. The binoculars can be adjusted to the operator's eyes. The mount can be tilted to position the work area in the center of the field of view. The focus ring is beneath the arm.

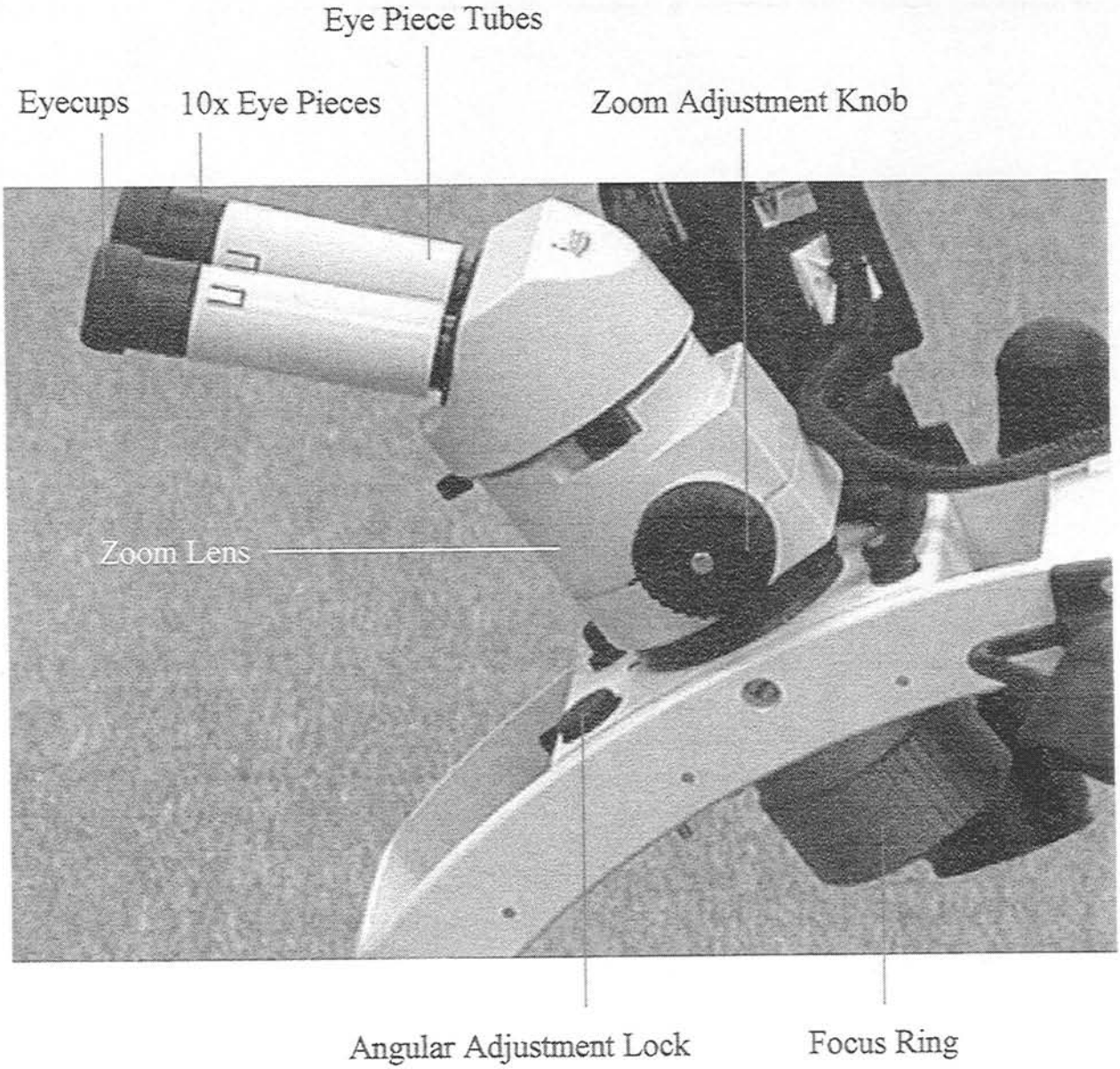

Color Camera Assembly

- The color camera system with zoom lens and mounting assembly is excellent for training, inspection and non-fine pitch alignment in the vision cube.
- The video image can be projected, either to the computer screen where it is integrated with the DRS software (through a multimedia option) or to a separate video monitor.

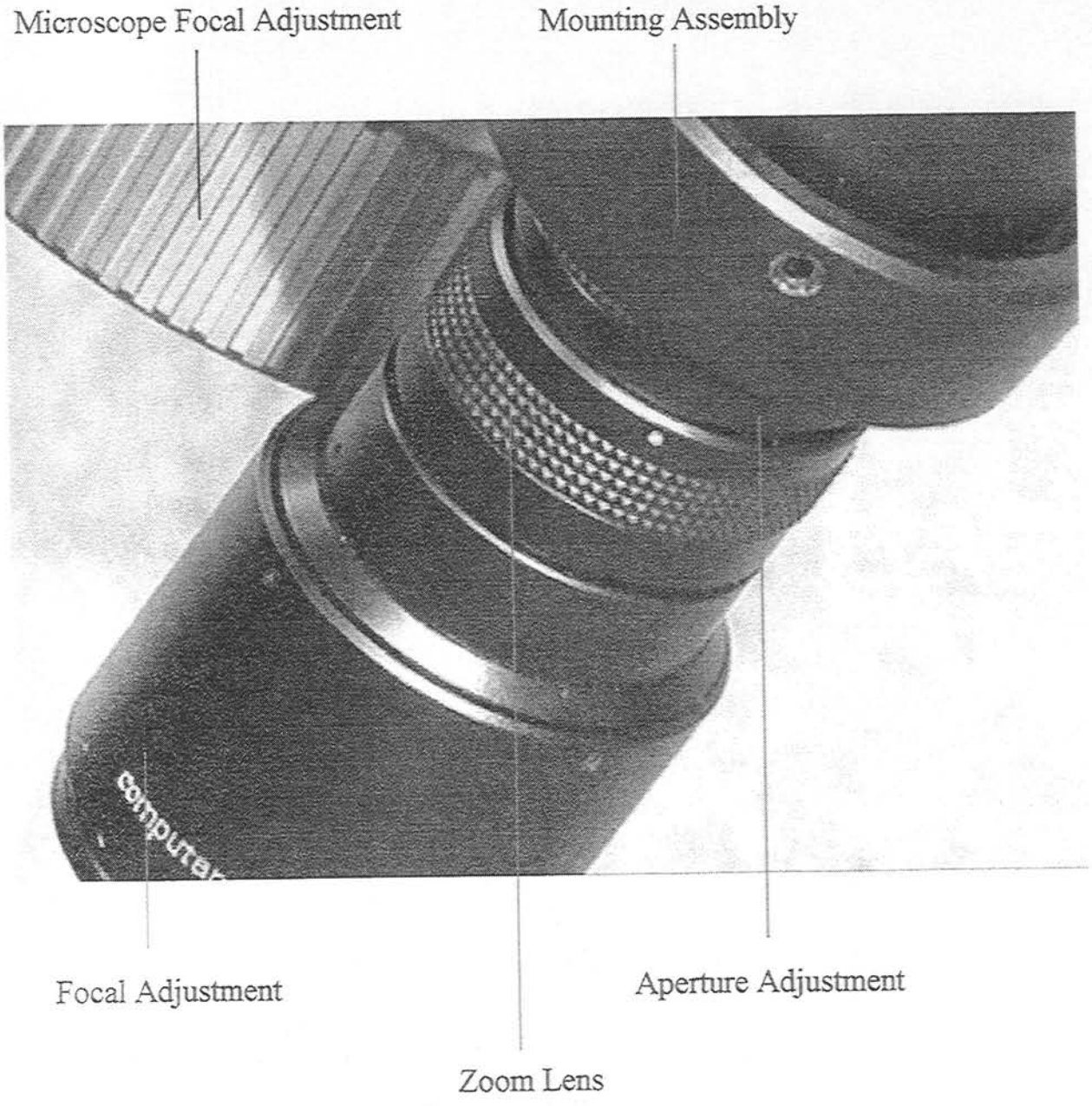

Halogen Lamps

To turn ON the lamps, push the main power switch and lamp switch

Note: Both lamps should be in the ON (1) position. Remove cap for bulb replacement (Part#14.00.15). (12 volts, 5 watt)

LPT® Vision System

The Lead-To-Pad (LPT) Vision system incorporates a beam splitting cube which slides over the work area providing four sided viewing for component alignment. The image of the component leads is superimposed directly over the printed circuit board pads. The housing slides away and the vertical movement knob lowers the SMD/Nozzle to the board for placement and reflow.

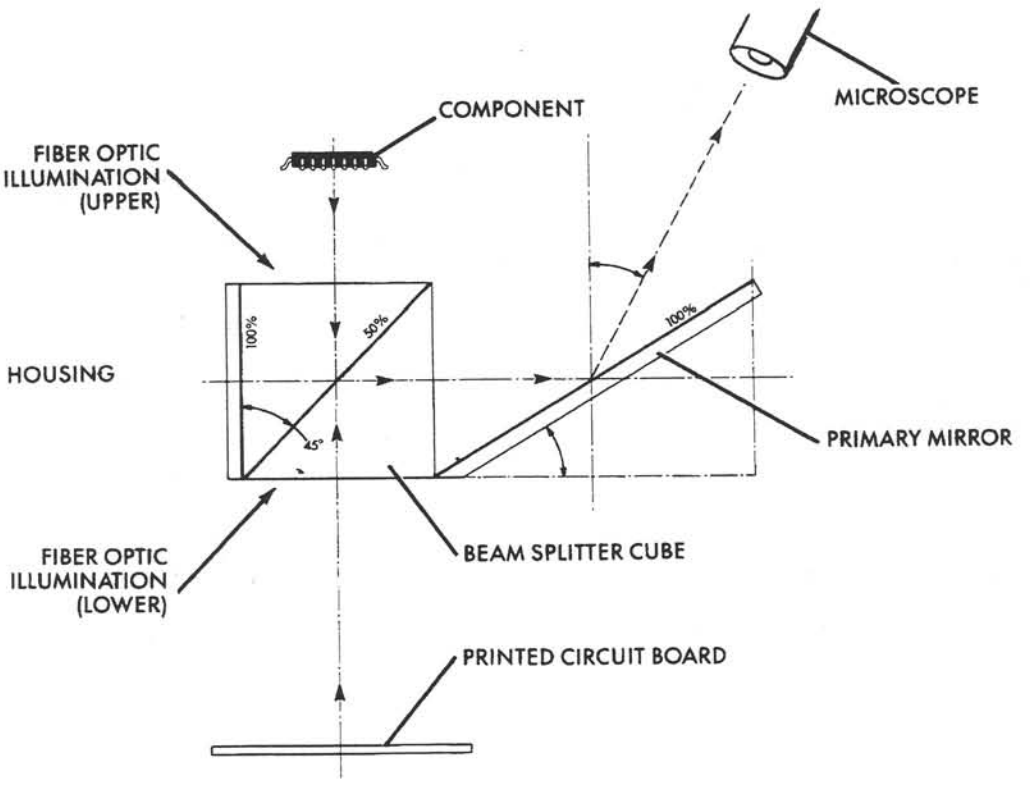

The image of the PCB is projected into the cube and deflected 45° to the primary mirror. The image of the component is projected into the cube and deflected 45° to the back of the cube. The 100% mirror on the back reverses the image to the primary mirror. Both images, the PCB and the component, are conveyed to the microscope.

Note: The microscope must be set at 60° axially on the arm to use the LPT ® vision system

Top Heater System

- The heater is a three pass design. An independent thermocouple protects the system from temperature overrun.

- The temperature control system of the heater is closed-loop and digitally displayed. It is adjustable up to 420° and is software controlled.

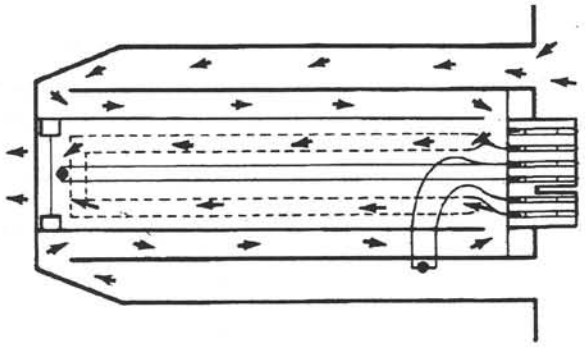

DF100
BOTTOM DIFFUSER/CARRIER ASSEMBLY

Area heating and proper underside support of a printed circuit assembly is often required during a repair operation in order to minimize board warpage which, if excessive, can result in "lead to pad" non-coplanarity. Minimizing board warpage is especially critical for BGA repair due to longer reflow cycles than traditional surface mounted devices.

Air-Vac's Bottom Diffuser/Carrier Assembly is a unique 9" x 11" area heating system which evenly distributes heated air to the underside of the printed circuit assembly through a matrix of orifices in the diffuser plate.

Software control of the high performance, 1500 watt closed loop heating element and variable air flow rates combine to provide the desired heat output for virtually any printed circuit assembly.

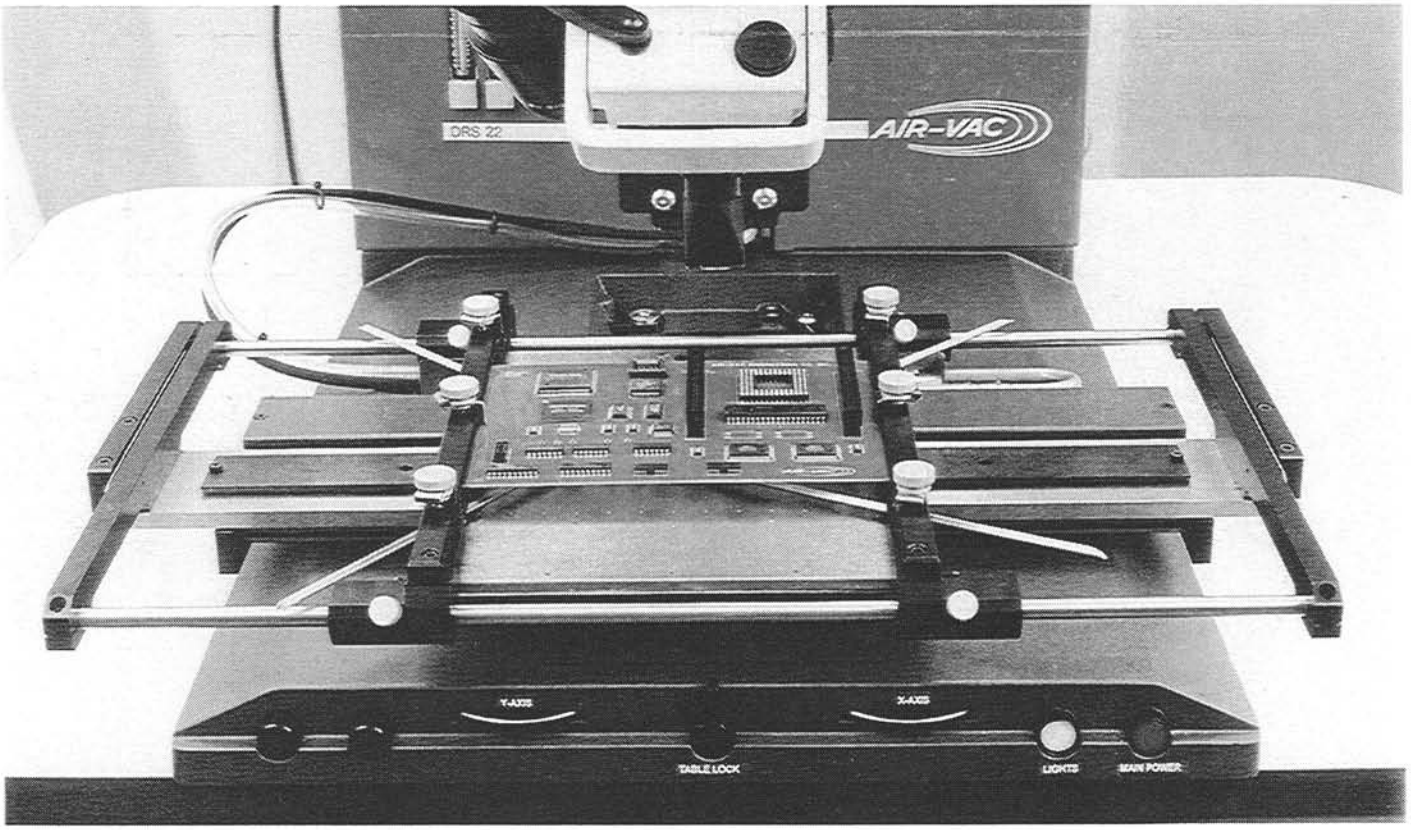

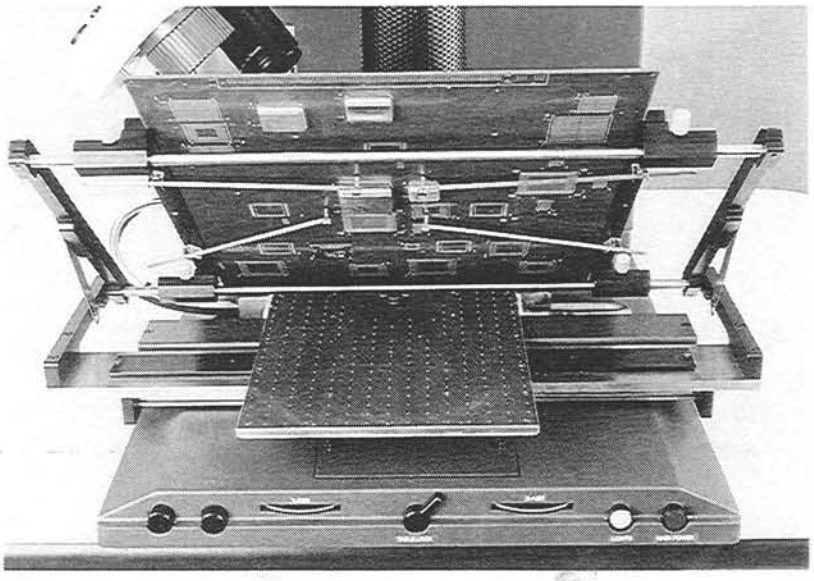

The "Pop-Up"Carrier Assembly provides the operator with easy, visible access to the underside of the board for precise positioning of multiple point-to-point board supports. "L" groove carrier arms with hold down clamps provide easy mounting and no movement regardless of board thickness. The carrier system can accommodate boards up to 17" x 20" and provides 5/8" clearance for bottom side components over the diffuser plate.

AIR-VAC
ENGINEERING COMPANY, INC.
30 Progress Avenue • Seymour, Connecticut 06483, USA
TEL: (203) 888 -9900 FAX: (203) 888-1145

Computer Hardware Reference

- The following cards are pre-installed by Air-Vac:
  - Digital I/O Card
  - Text to screen card
  - Multi-media card (optional)
  - Sound card (optional)

Card 1: ***Digital I/O Controller Card*** **(#TC3-01)**

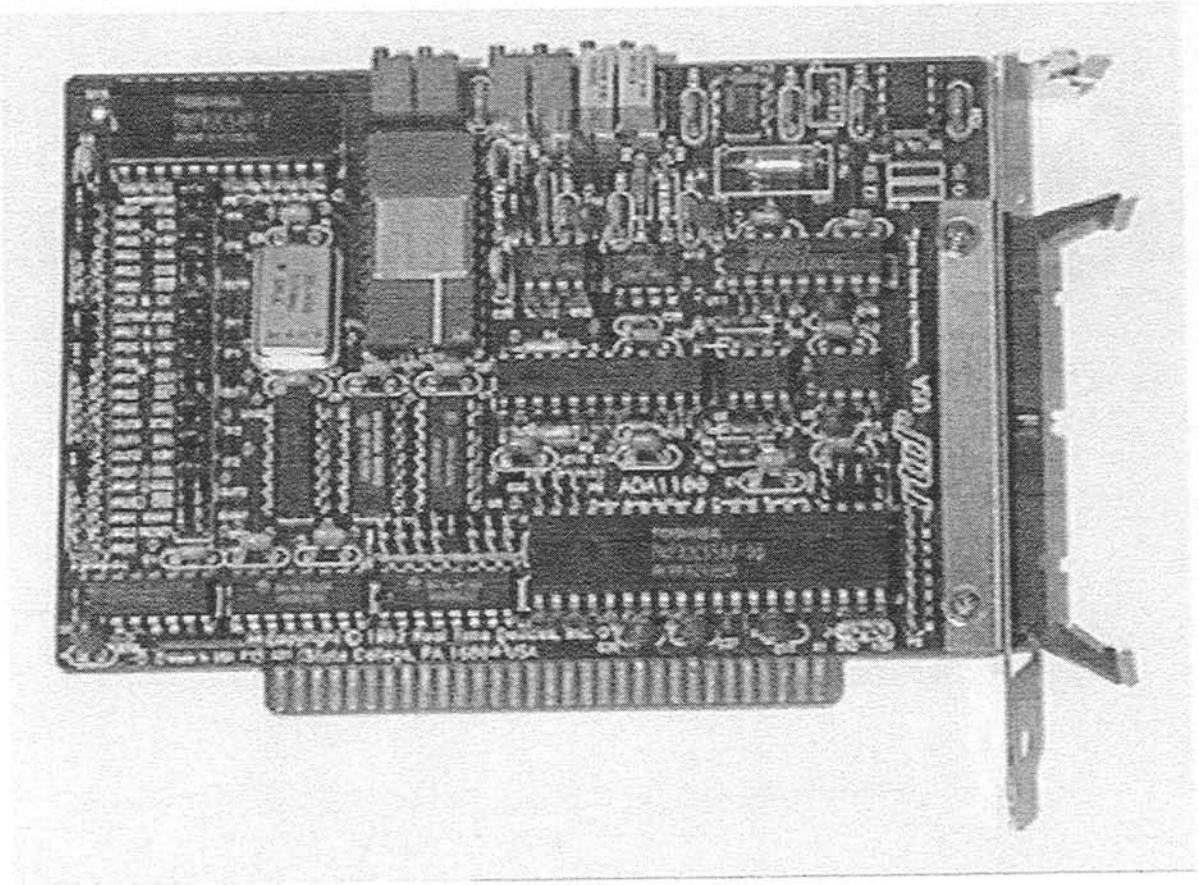

Note: See next page for board jumper settings.

WARNING: Do not remove or install any cards unless power is ***OFF***.

WARNING: Do Not Connect Any Cables Unless Power Is ***OFF***.

Digital I/O Board - JUMPER Settings

Check to see that there is 1 jumper on the 10V connection for P9

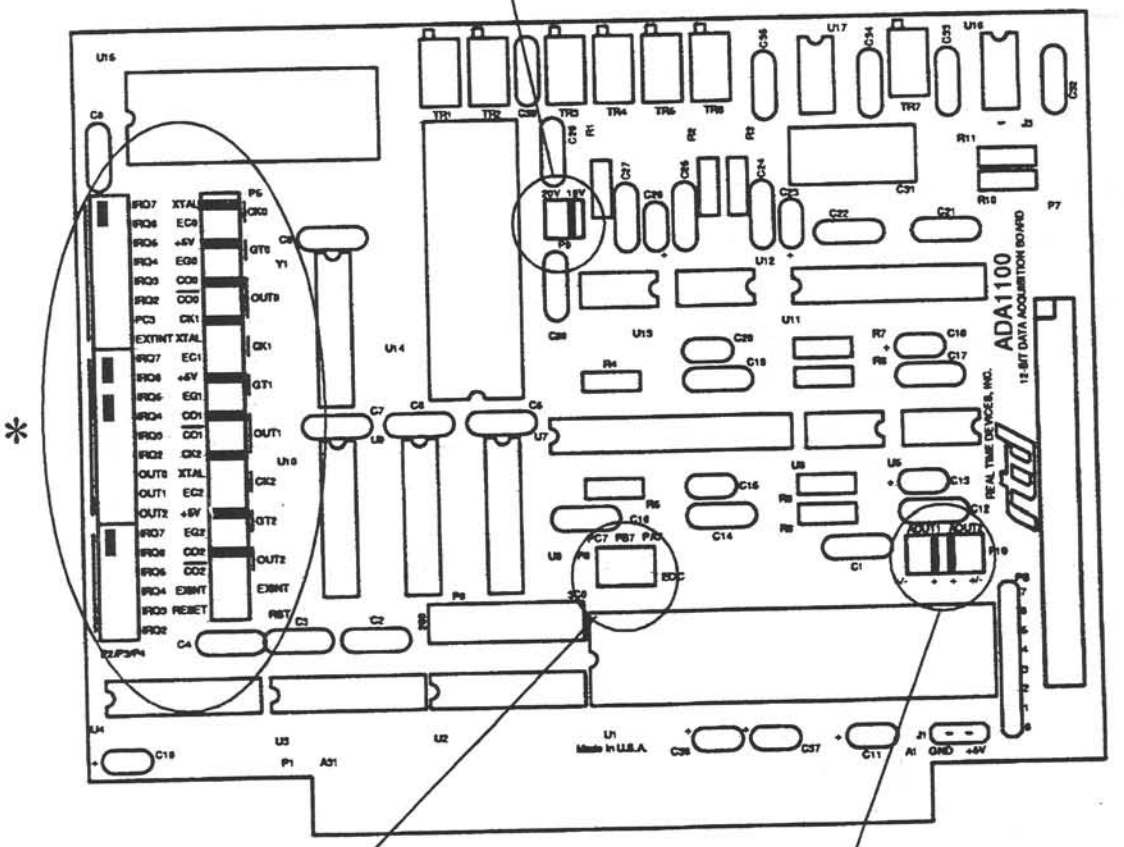

Check to see that all 3 jumpers are removed from P8

Check to see that there are jumpers on the center 2 connections of P10.

* Additional jumpers that need to be set or varified for use with a double (two) element diffuser heating surface.

Card 2: ***Multimedia (Video) Card*** - The computer monitor must be plugged into the HD15 connector on the multimedia card. In addition, a BNC octopus cable (several BNC connections) must also be plugged into the multimedia card(standard 15-pin connector).

Note: The LIVE video source MUST be plugged into the GREY BNC connection.

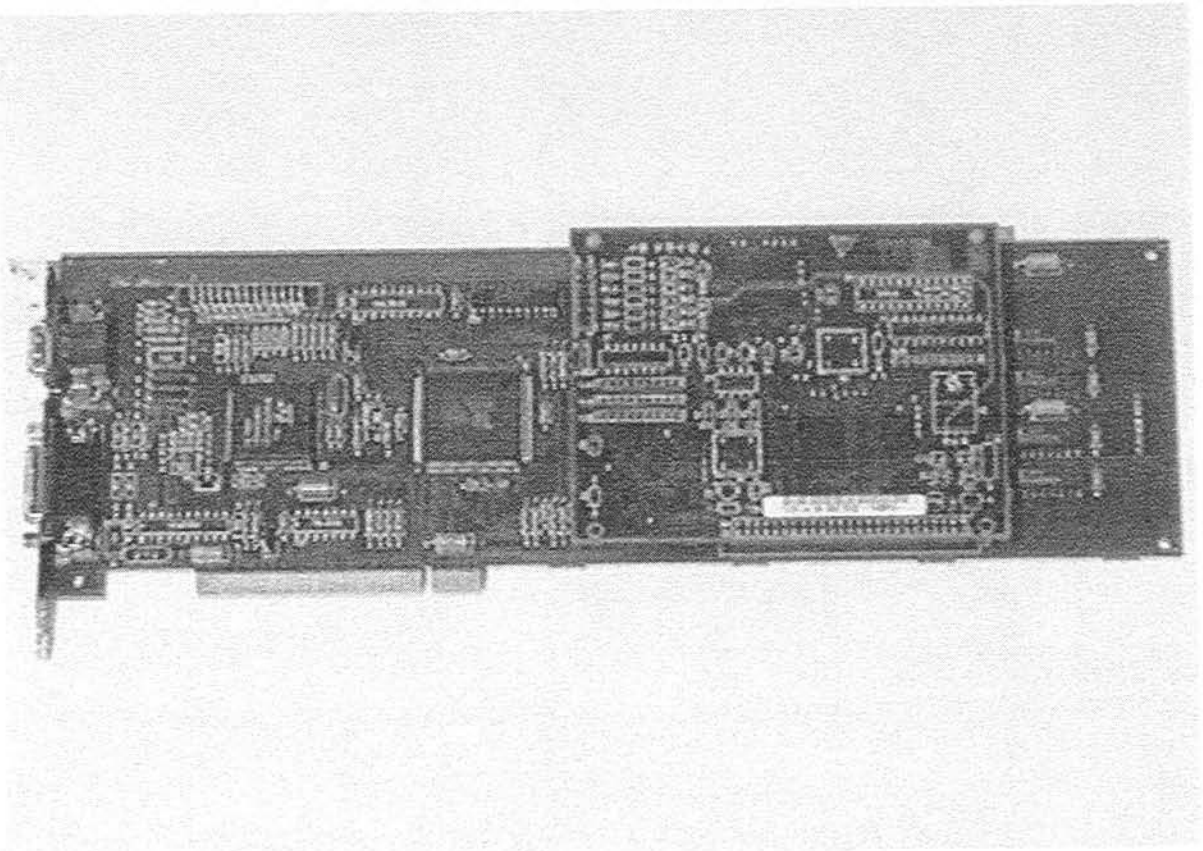

Card 3: ***Text-To-Speech Synthesizer (Voice) Card -***

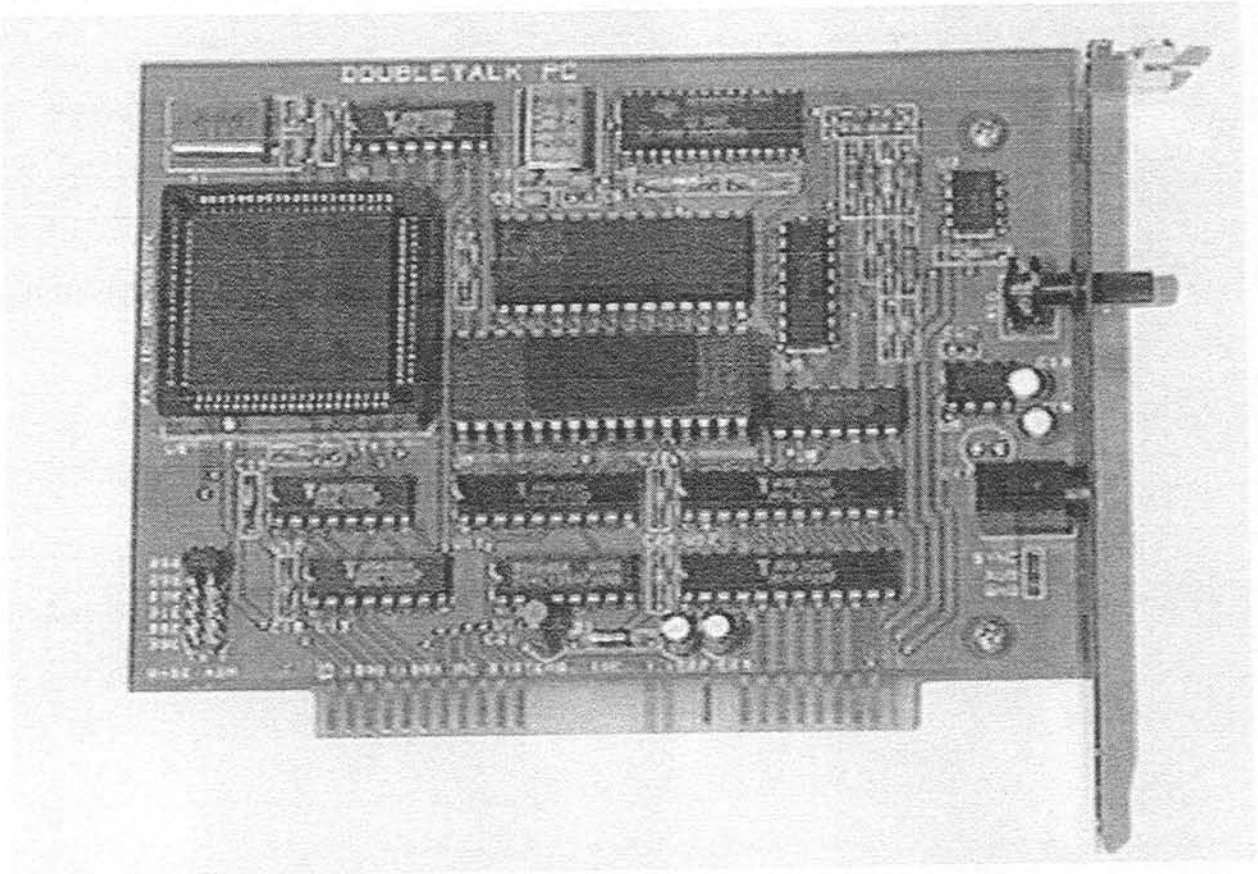

Air-Vac Engineering Company, Inc. Software License Agreement

Opening this package indicates the Licensee's acceptance of all the terms and conditions of this agreement.

Air-Vac Engineering Company, Inc. (Licensor) provides this license agreement to the original purchaser of this package (Licensee). The diskette containing the software has a serial number that is uniquely assigned to the Licensee. The Licensee should carefully read this agreement prior to opening the sealed package containing the diskette.

License

The Licensor grants a non-exclusive software license to the Licensee to use the supplied software on the single machine on which it is initially used.

Terms

The Licensor's software and documentation is copyrighted. The Licensee agrees to uphold these copyrights.

The terms of this license agreement take precedence over any purchase order or document. All the applicable terms are provided herein.

This license may not be assigned to any other individual. The right to "rent", "sell" or otherwise transfer this software in part or in whole is not granted to Licensee.

The licensee has the right to make copies of the software solely for backup purposes. Licensor's copyright shall be extended to cover this copy and a copyright notice shall be placed on the copy by the Licensee. The Licensee may also copy the supplied software onto the fixed hard disk of the machine.

The Licensee may not use, copy, modify, or transfer the programs or documentation, or any copy, modification or merged portion, in whole or in part, except as expressly provided for in this license. The Licensee agrees to indemnify the Licensor against any loss or expense incurred by the Licensor on account of the Licensee's use or transfer and unauthorized copy of this program or other breach of the provisions of this license.

The software cannot be transferred via media other than that on which it is supplied. It cannot therefore be transferred via such media as telecommunication lines.

The software can be used only on a machine that has one display station and one keyboard. Thus the usage of this software on any type of a network that involves access of the

software from more that one workstation is prohibited.

The Licensor's software product cannot be used in country groups that would violate the United States export regulations.

Disclaimer of Warranty

The software is provided on an "as is" basis without warranty of any kind whatsoever, either expressed or implied. The Licensor does not warrant the software to be error free, nor does it warrant the software to meet the Licensee's specific requirements.

Air-Vac will make a resonable effort to correct any software errors that are found by Air-Vac or the Licensee.

In the event that the media (diskette) containing the software is found to be defective within a period of ninety (90) days (this includes any evaluation period) of the receipt by the Licensee, the Licensor will replace it free of charge if it is returned, postage prepaid.

Limitations

In no event will the Licensor be liable for any damages arising out of the use or inability to use such software.

Under no conditions will Licensor's liability exceed the purchase price of this software.

Copyright 1995 Air-Vac Engineering Company, Inc.

DRS22 Release Notes

Version 3.22

Sept 1996

Engineering Company, Inc.

30 Progress Avenue (203) 888-9900

Seymour, CT 06483 (203) 888-1145

AIR-VAC Engineering Company, Inc.
30 Progress Avenue (203) 888-9900
Seymour, CT 06483 (203) 888-1145

DRS22 - Version 3.22

New Features:

1. *Network file access.*
   - Disk drive independent.
     - Floppy drive.
     - Local disk drive .
     - Network disk drive.
   - User defined directories.
     - Profile libraries.
     - Process history.
     - Photo files.
     - Export files.
     - Error files.

Typical DRS22 Network Server Directory Structure

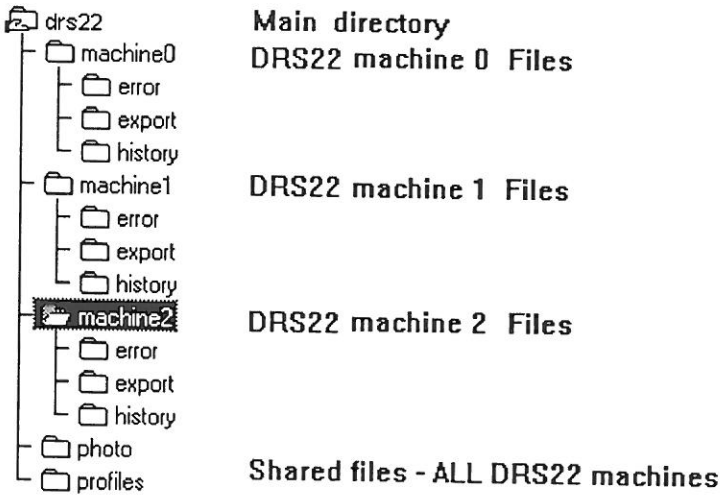

DRS22 Network Setup Parameters

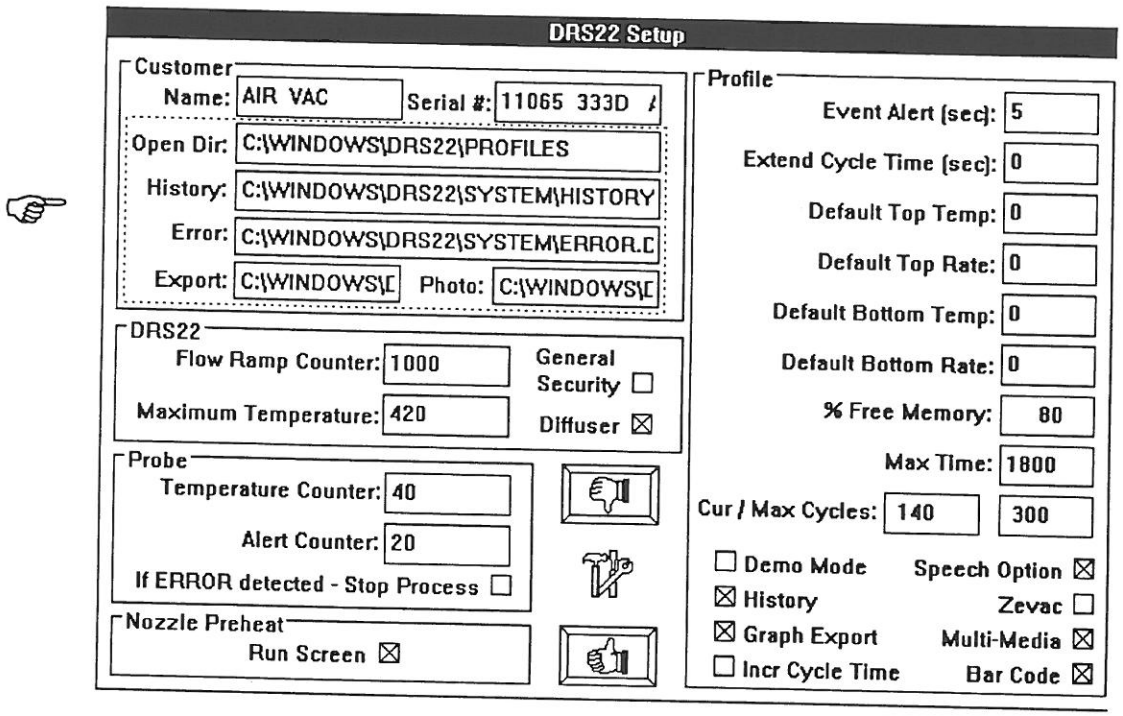

2. ***Long file names, new save/save as screen features.***

- The save as screen allows directory changes and long file names. Up to 60 characters can be used to create very descriptive profile names. These long file names are displayed from the open, save, backup and restore screens.
- A cross reference file (file.dat) is stored in every directory where profiles are stored. The long name is the first field in the file; this is followed by the short name. The system automatically creates a numeric-based short file name for new profile or save-as activity. The cross reference file (file.dat) is normally maintained and managed by the software. The operator only sees the long file name during normal process procedures (open, teach, save, backup, restore).
- If the cross reference file (file.dat) becomes corrupted, deleted or does not exist (software upgrade), it can be manually created or modified. The open option has a *NotePad* tool which can be used to create the long/short name references.

Note: The ***save-as*** option should only be used when a *new* file is being created from an existing file. The save-as option will always create a new short file name.

Save As Screen

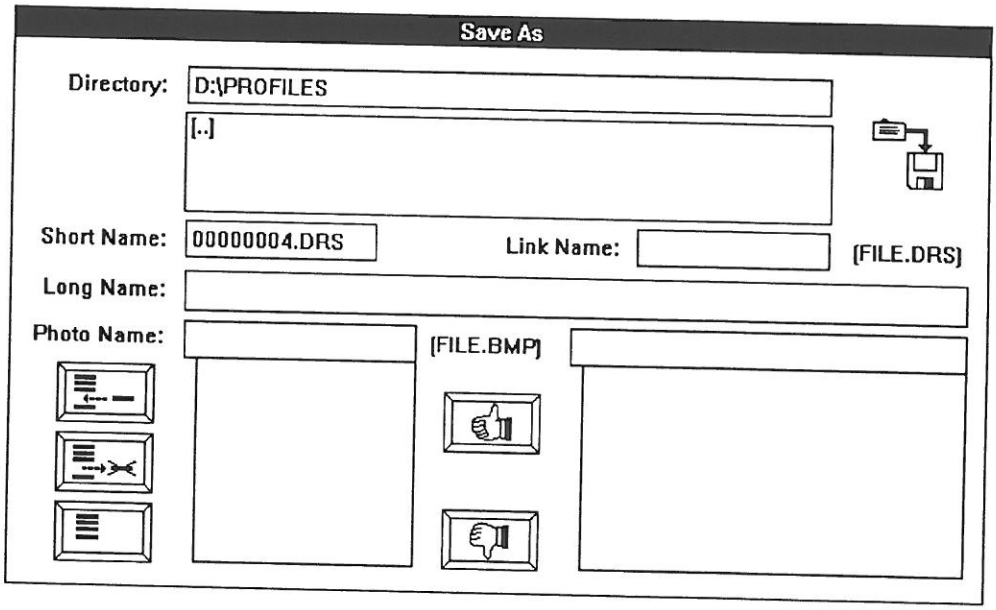

Open Screen - Note Pad Option

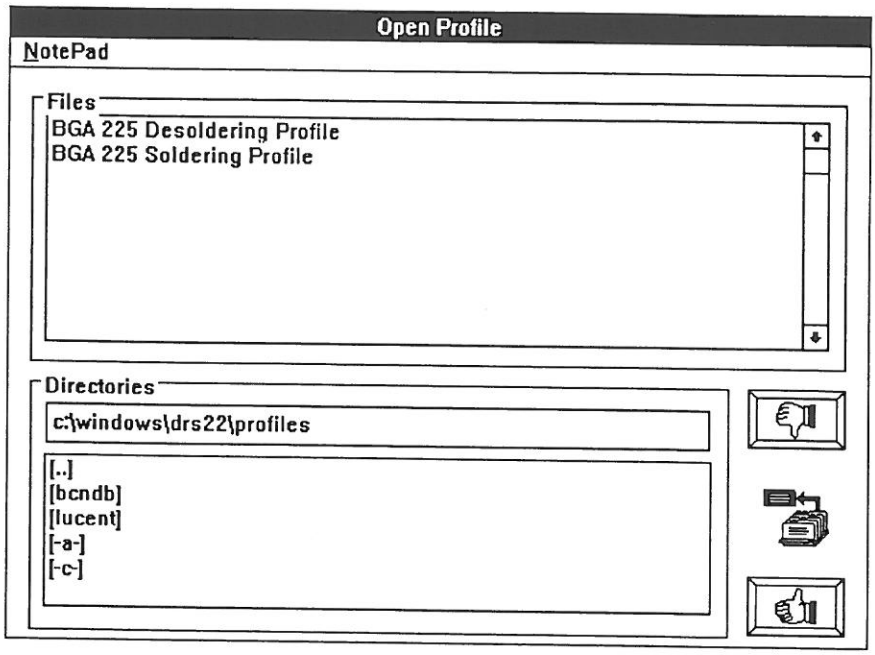

File Format: FILE.DAT (long/short name cross reference file).

Sample

BGA 225 Desoldering Profile	User defined long name 1
00000001.DRS	System generated short name 1
BGA 225 Soldering Profile	User defined long name 2
00000002.DRS	System generated short name 2
Temp File - Last Profile Changed By Teach	User defined long name 3
TEMP.DRS	System generated short name 3

3. ***Bar code scanning.***

- A setup parameter (setup - page 1: *Bar Code*) can force board serial number entry.
- The run screen has the capability to accept keyboard entry for board serial number.
- Serial number data is written to the history and export data files.
- The import screen can be used to search for recurring serial numbers or used to investigate field-related issues for a specific board.

Setup - Page 1

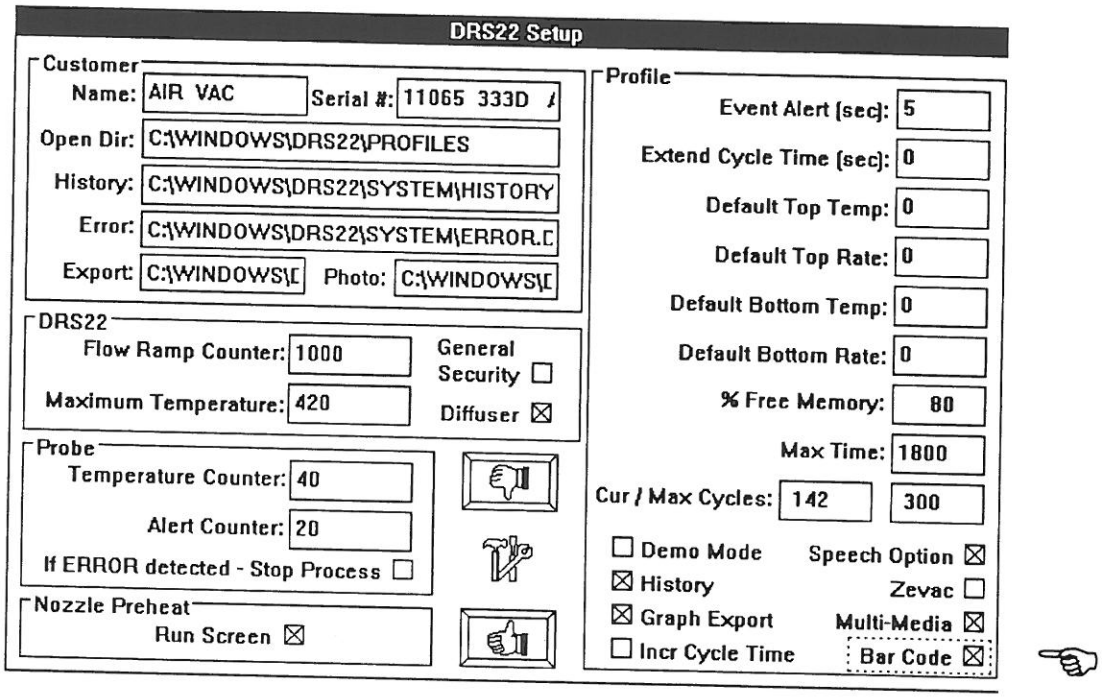

Bar Code Message

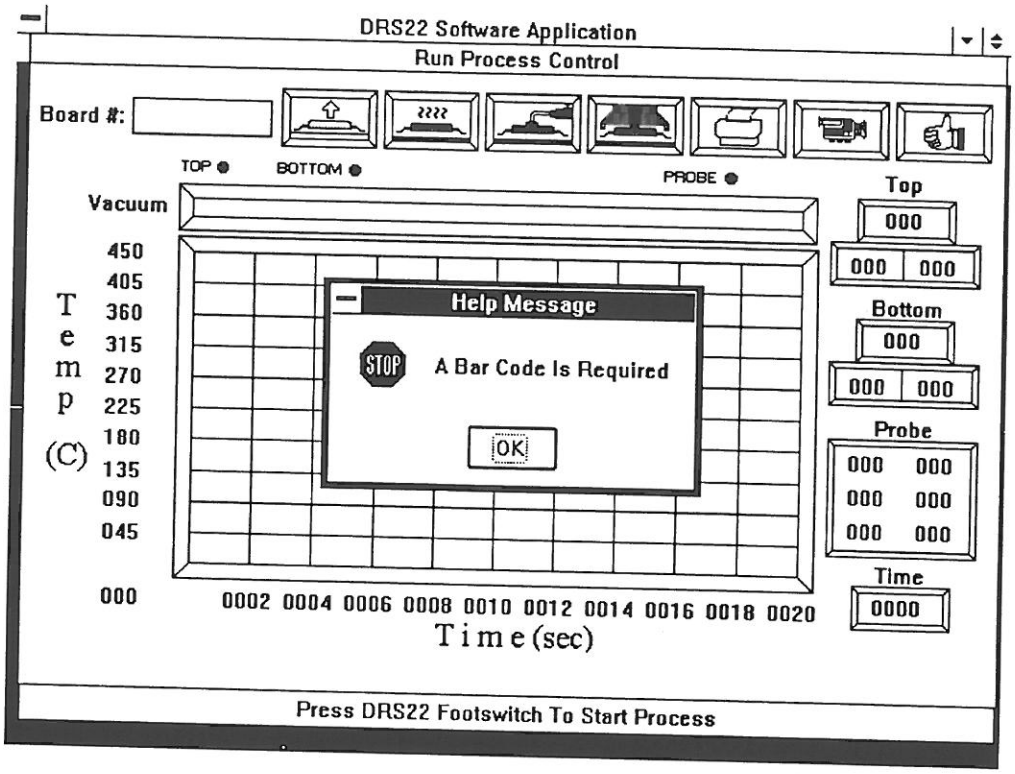

4. ***Software profiles beyond 999 seconds.***

- A setup parameter (setup - page 1: *Max Time*) allows profiles to run beyond the 999 second limit (previous version). 1800 seconds (30 minutes) is the maximum; this parameter should be as small as possible. If the combination of foot switch events and time based events exceed the maximum limit, the process is terminated and the operator is informed. A foot switch event has a maximum time limit of 990 seconds. If an individual foot switch event goes beyond this limit, the process is terminated and the operator is informed.

Setup - Page 1

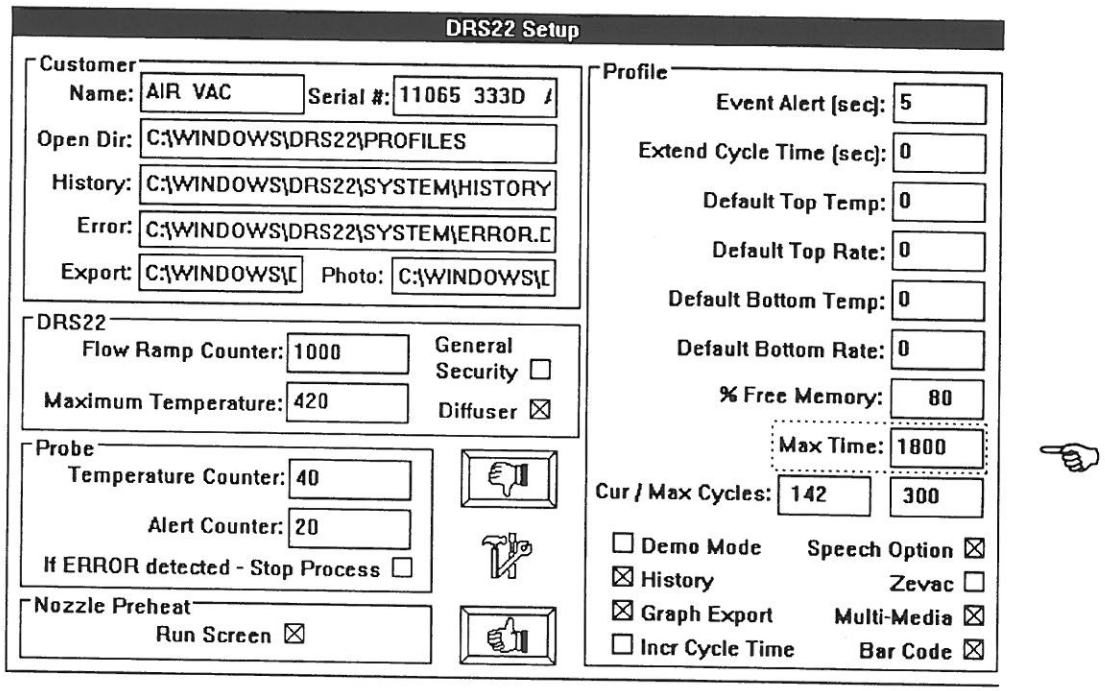

Maximum Time Message

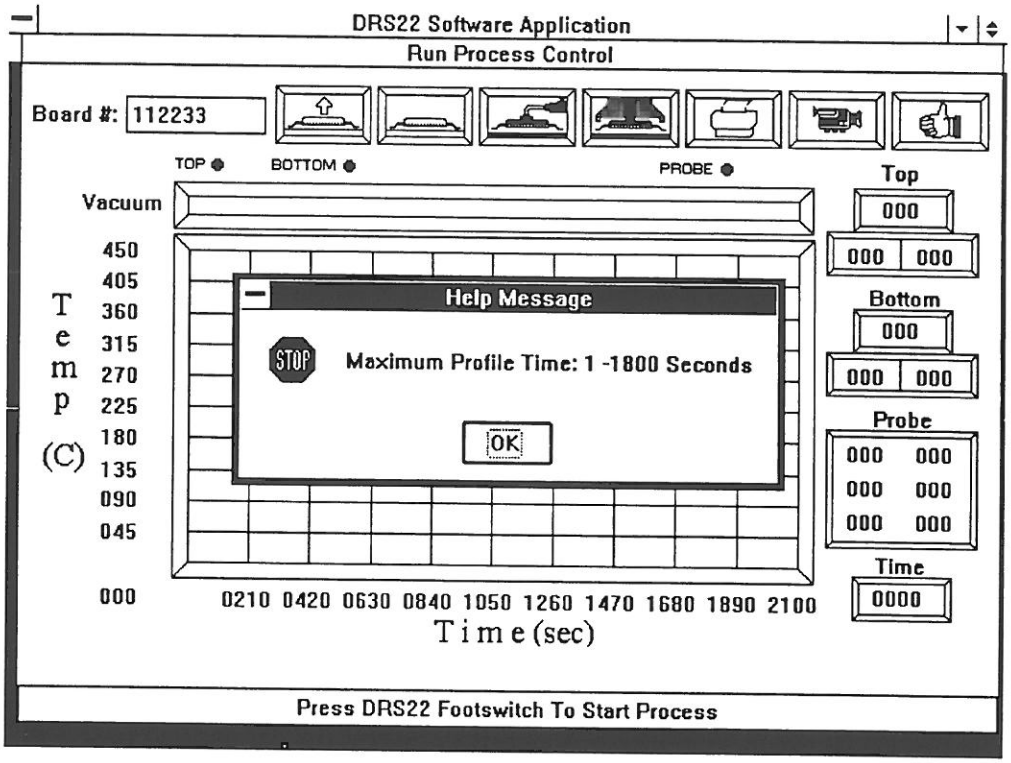

Maximum Foot Switch Message

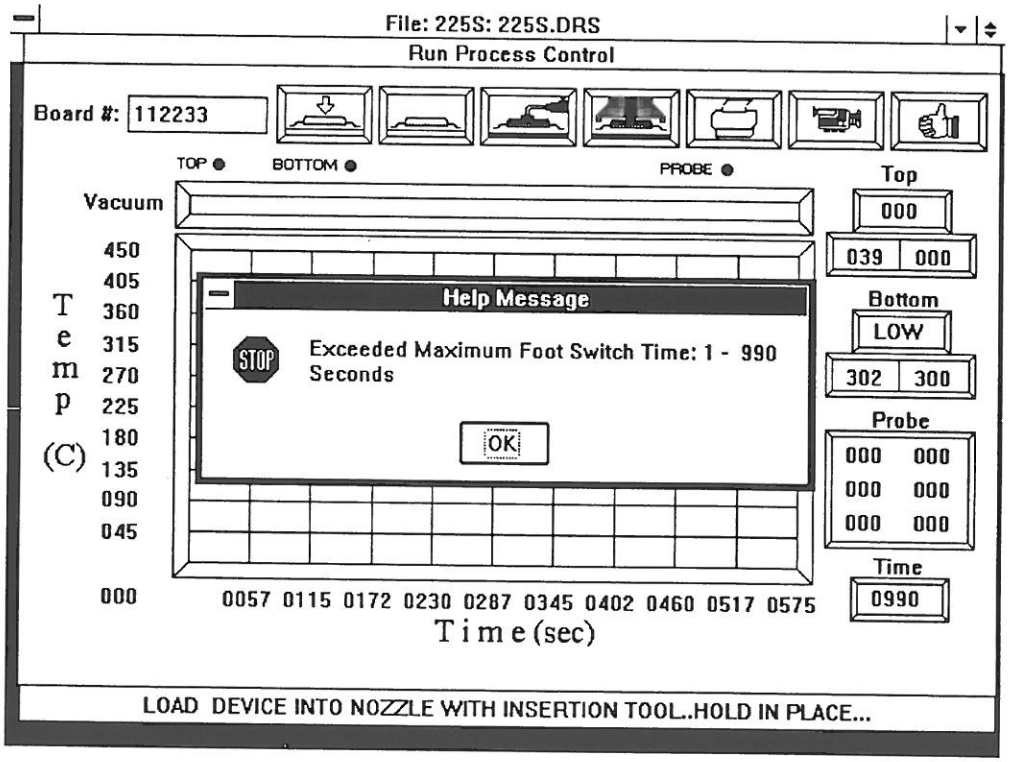

5. ***Automatic graph file exporting.***

- A setup parameter (setup - page 1: *Graph Export*) can allow the process graph data to be automatically written (exported) after each process cycle. The software will track and control the sequencing of these data files automatically. When a process cycle is completed, the system uses the short file name (see long file names) of the currently opened profile to either create a new directory, or change to the existing directory (within the export directory). The file sequence names are 8 numeric digits (maximum data files is 99999999 or hard disk drive size) followed by the .DAT file extension. The file, index.drs, controls the automatic file sequencing.

Setup - Page 1

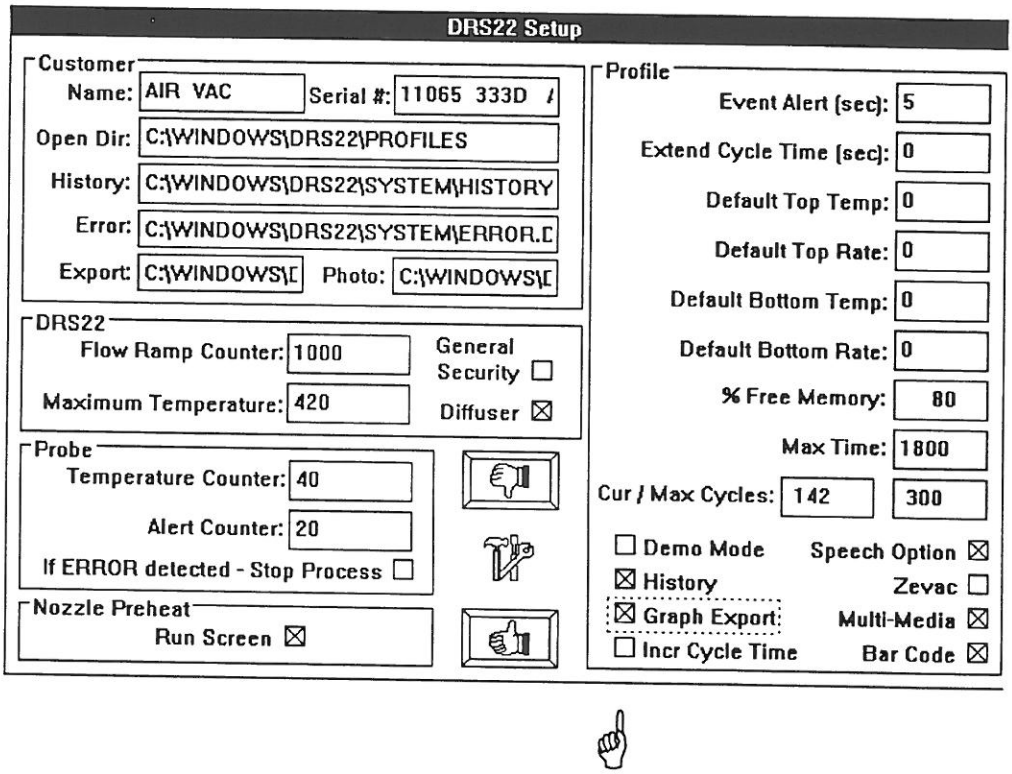

File Sequencing - Export Data

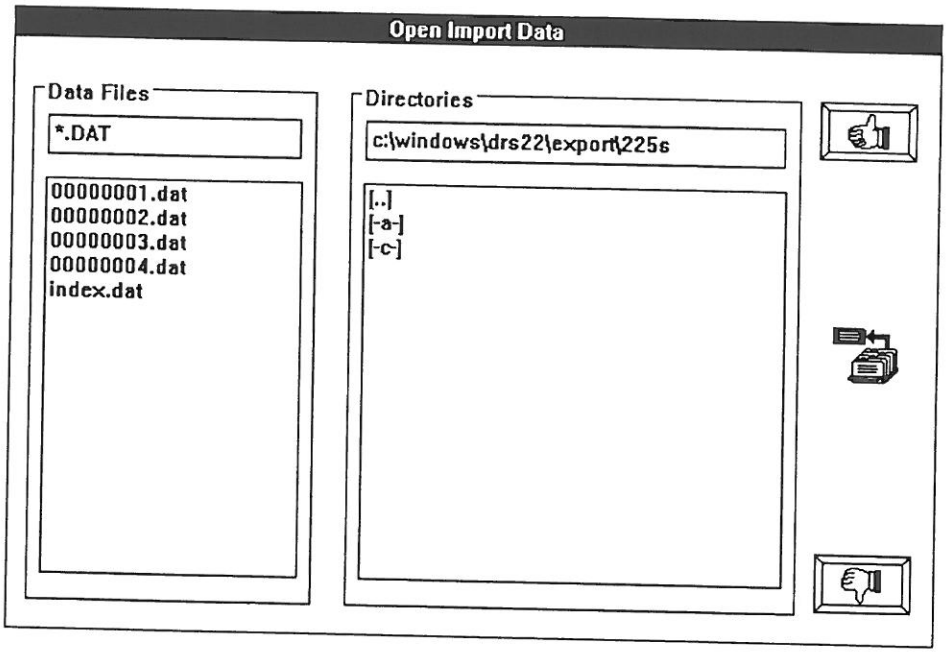

6. ***Improved graph import file access.***

- The import option now allows graph data to be selected using an open-style option. The user can quickly select/review multiple data files directly from within the import screen. Additionally, the serial number (if entered) and file sequence number will be displayed to identify the graph data.
- A board number search can be performed to allow specific (and multiple occurrences) serial numbers to be tracked and reviewed.

Import Screen

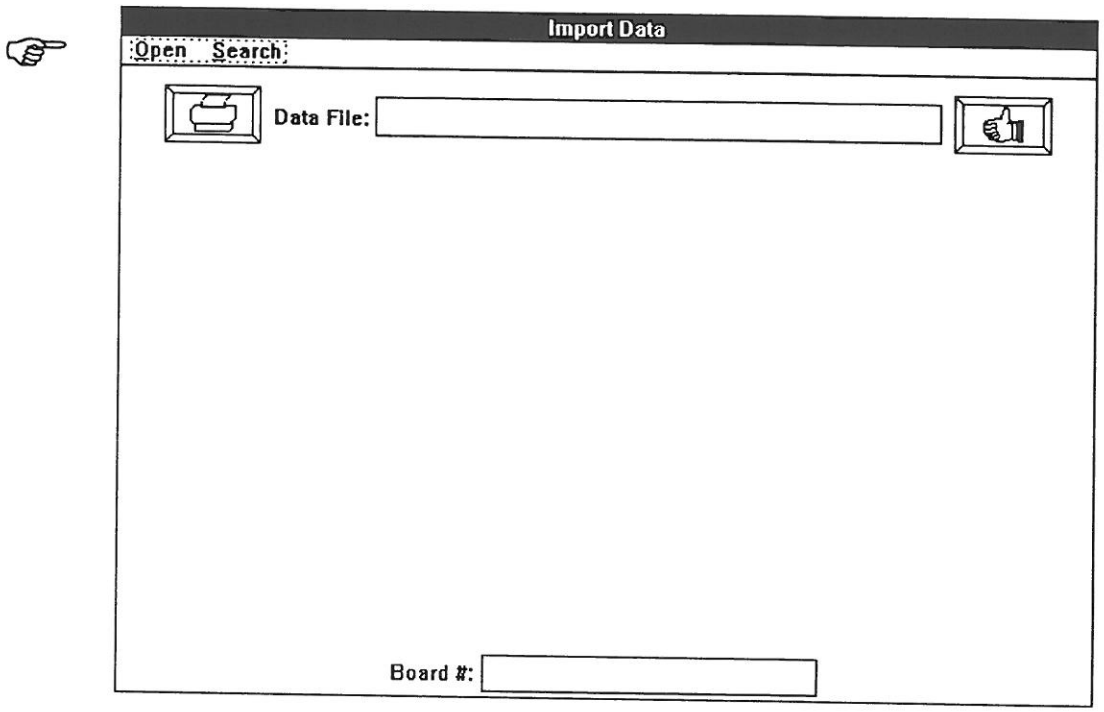

Import: Search Screen

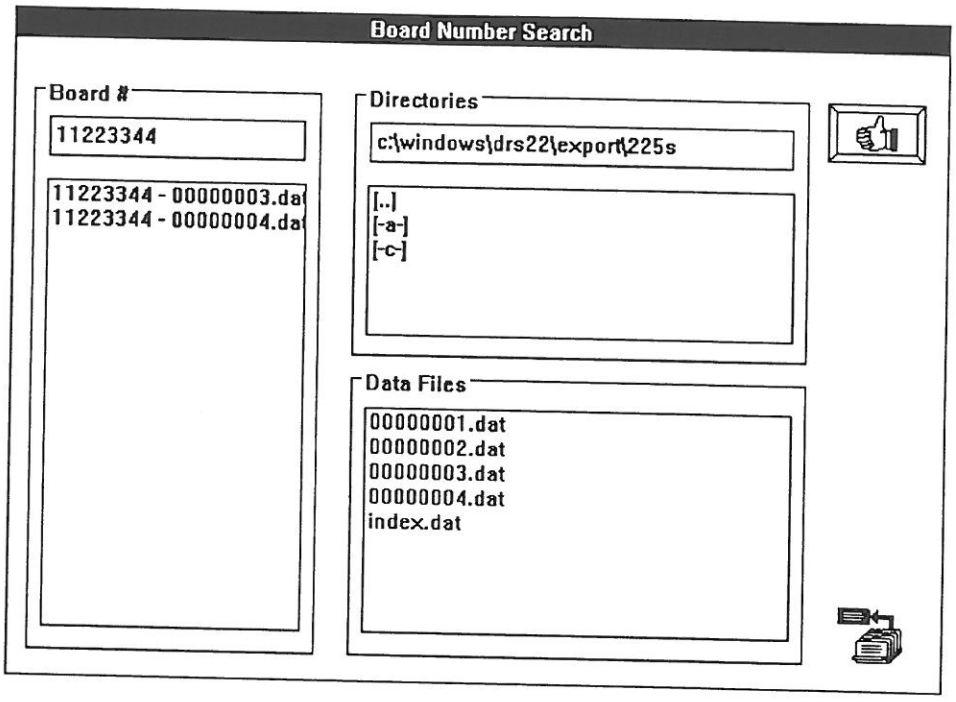

Import: Open Screen

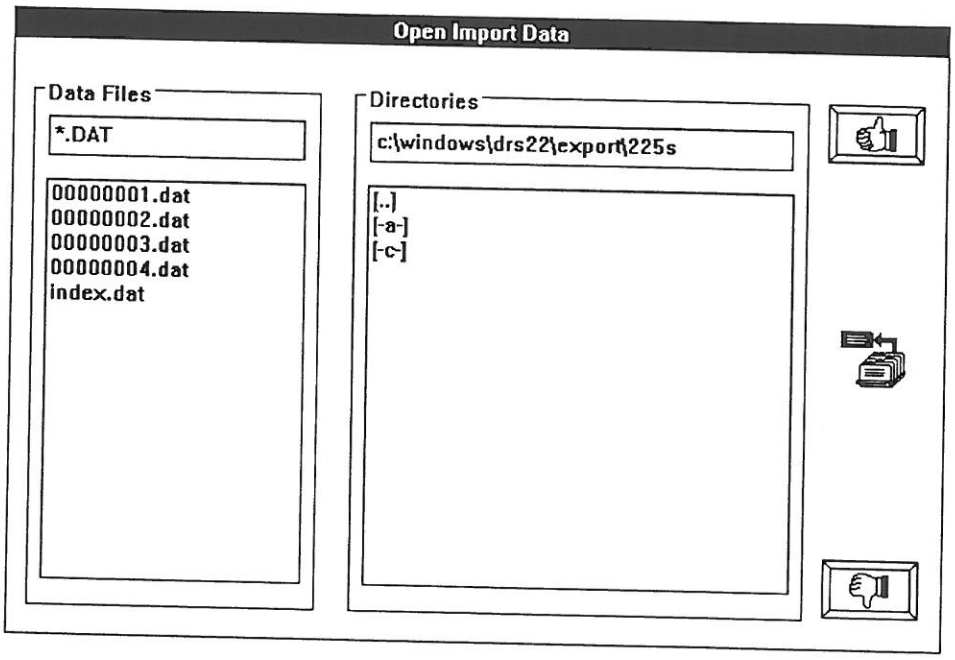

Import: Display File

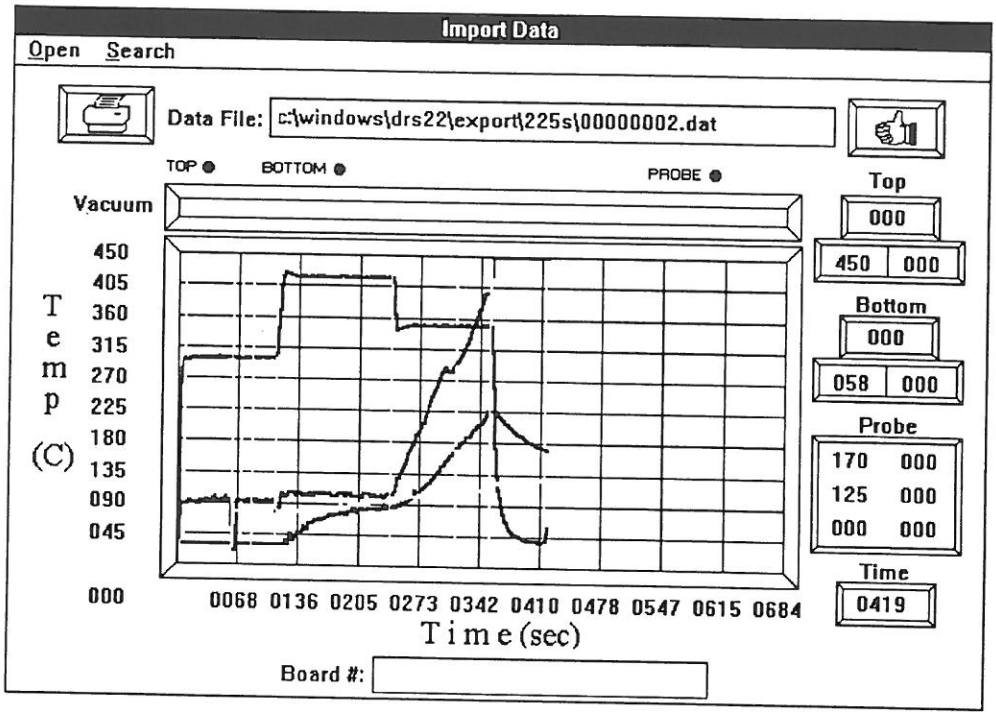

7. ***Software check for missing control thermocouple.***

- If a thermocouple channel is defined as a stop-process or skip-to-next event, then the system will check for a valid temperature range (temp<300C). If the computer sees above 300C (false reading), the system will stop the process and report the error to the operator. This validation will only occur during the event that is defined in this way. This means the system may complete several process events before the termination occurs.

Thermocouple Message

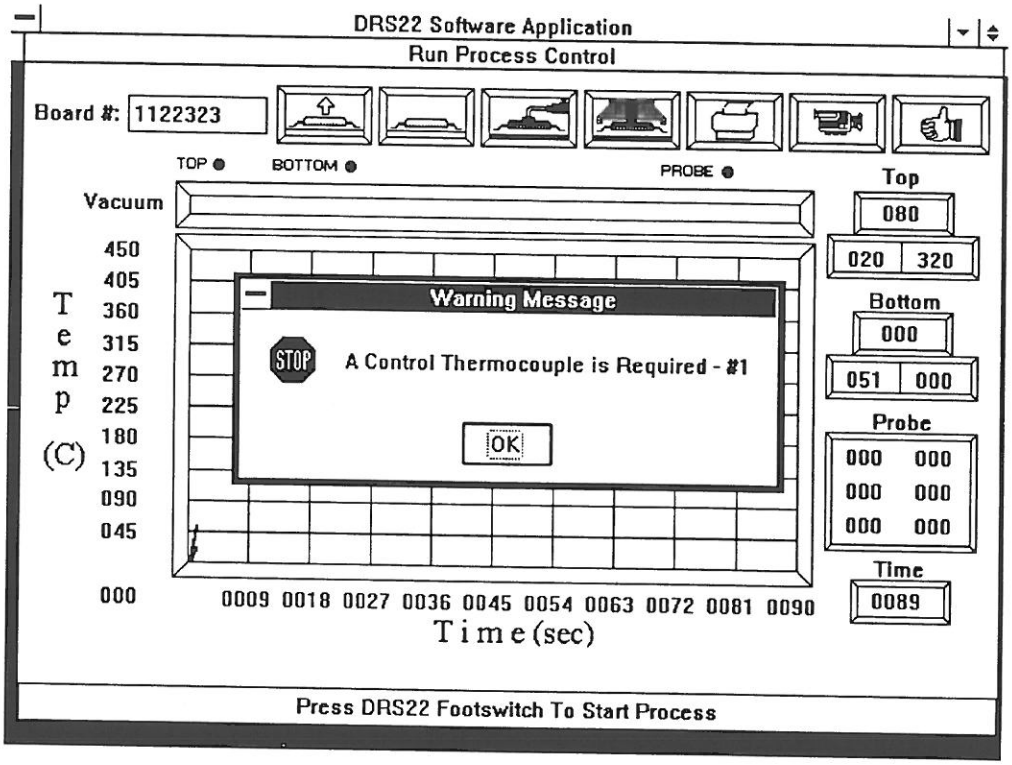

8. ***Software check for failed communication with the diffuser temperature controller.***
   - If the software sees a failed communication with the diffuser temperature controller, the process will terminate and the operator will be informed. Next, the software will automatically activate the operator registration screen. Completing the operator registration screen will attempt to re-establish the serial communication link.

Communication Failure Message

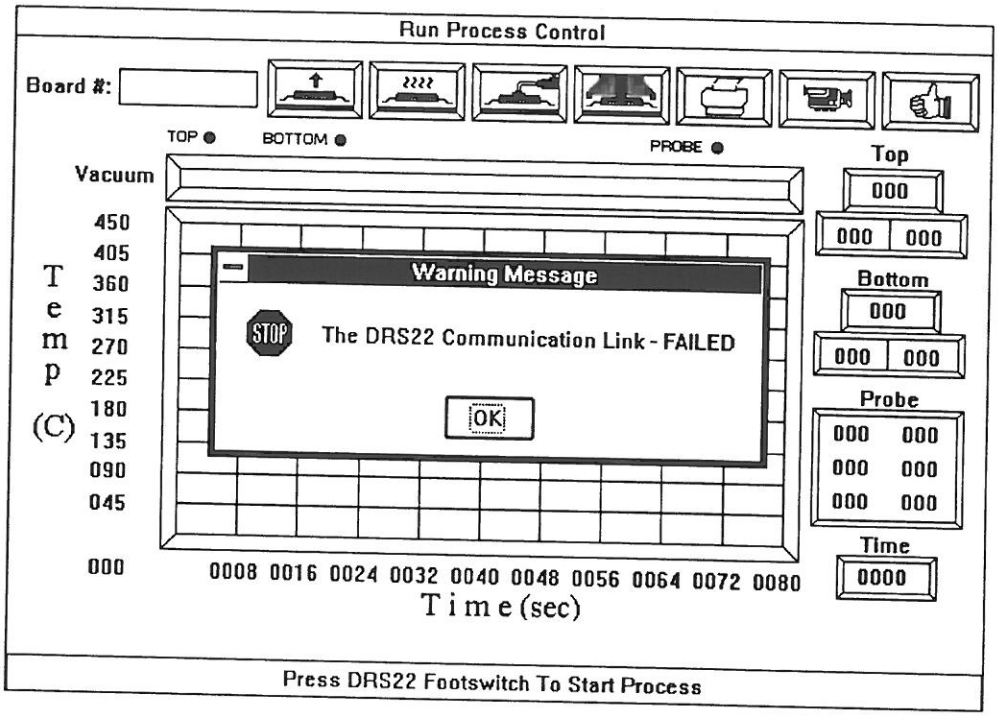

9. ***Resetting operator reestablishes all communication links.***

- If a communication failure occurs, resetting the operator will automatically attempt to re-establish the serial communication link. The software does not need to be exited or rebooted to re-link the serial communication.

Reset Operator / Reset Communication

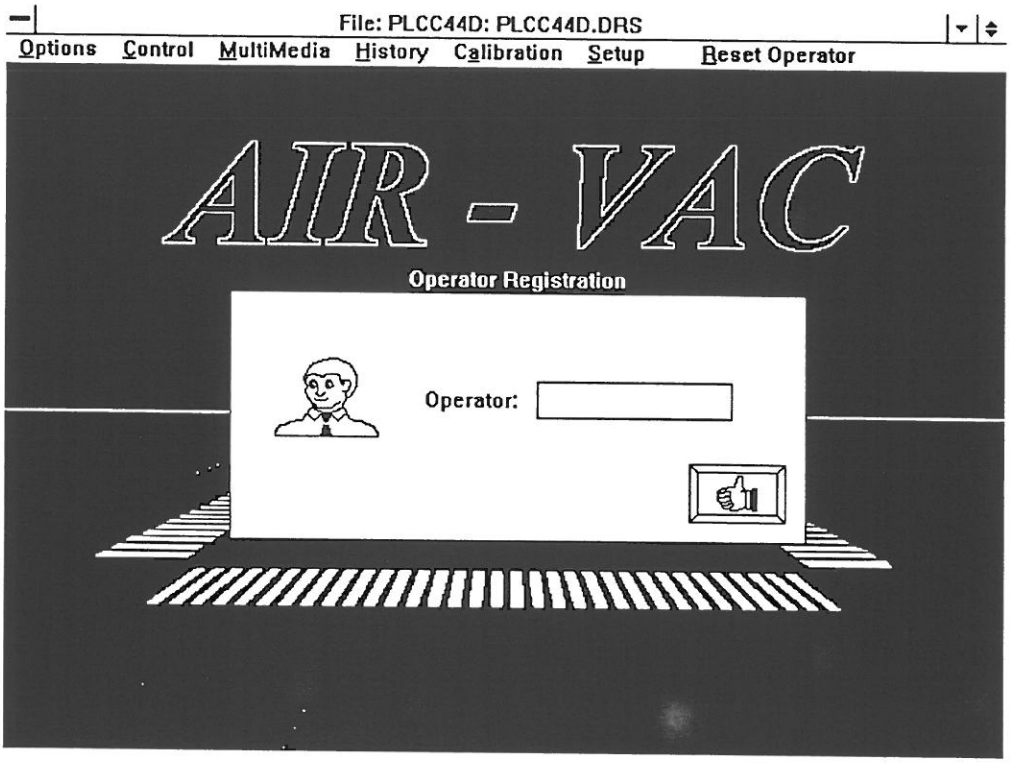

10. ***Cycle counters to monitor and control maintenance requirements.***

- These setup page (setup - page 1: *Cur/Max Cycles*) counters allow the system to halt all activity if a maximum cycle count is exceeded. This can be used to maintain schedules such as heater calibration.

Setup - Page 1

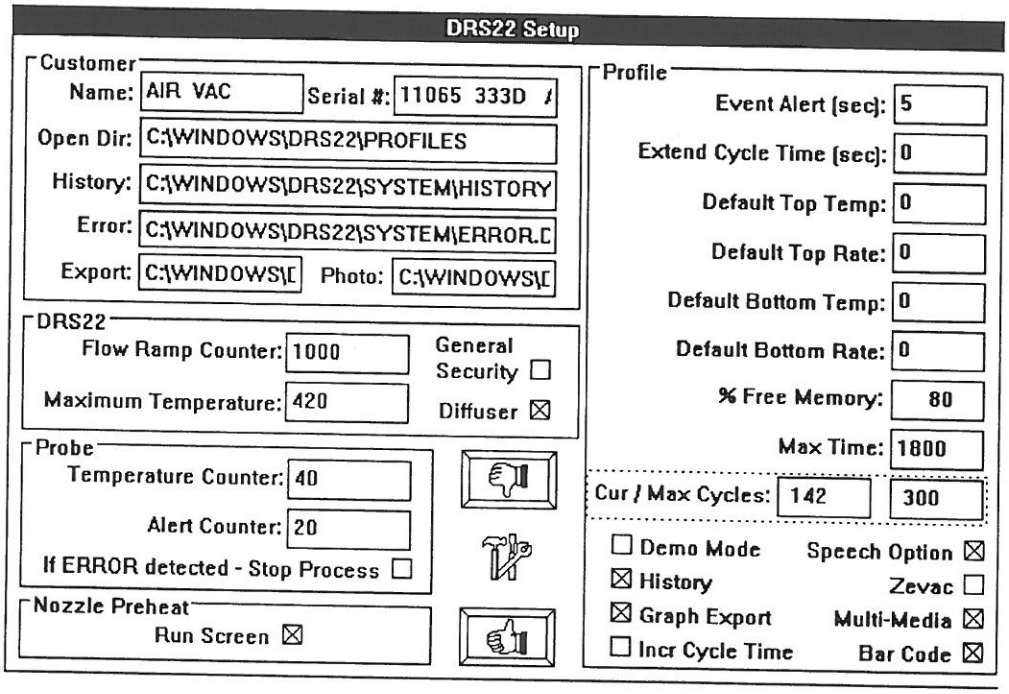

Cycle Counter Exceeded

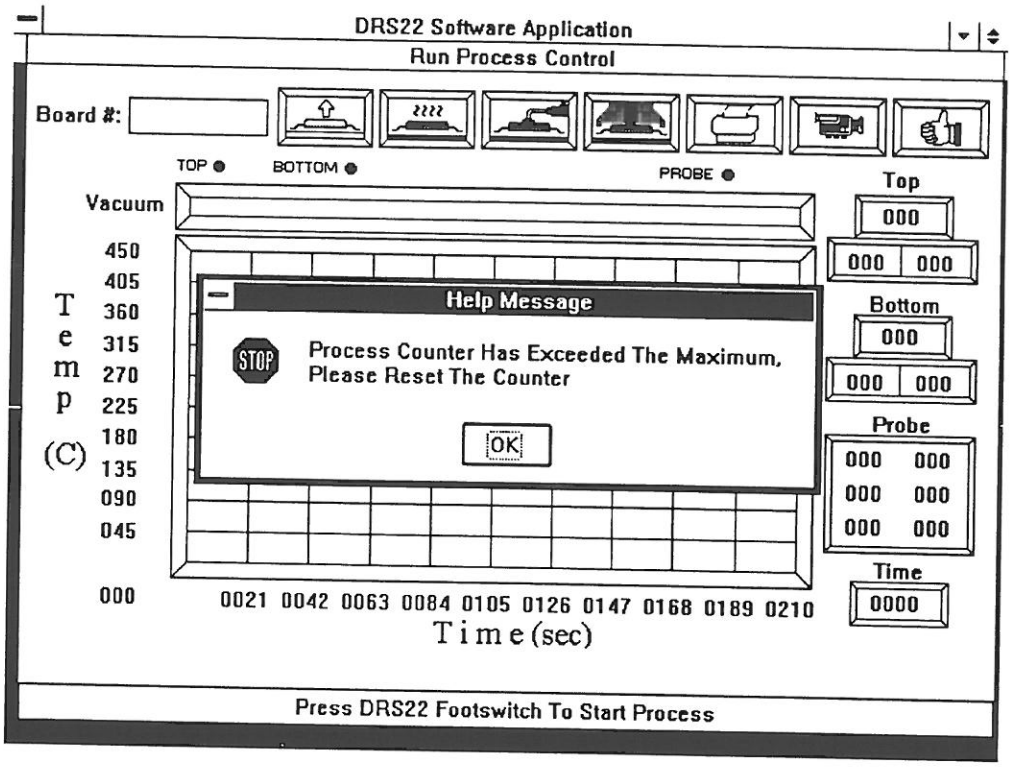

11. ***Quick Cycle Counter Reset.***

- The current cycle counter can be quickly reset by selecting the setup menu and clicking on *Reset Cycle Counter*. This menu option is not password protected which allows access from any security level.

Reset Current Cycle Counter

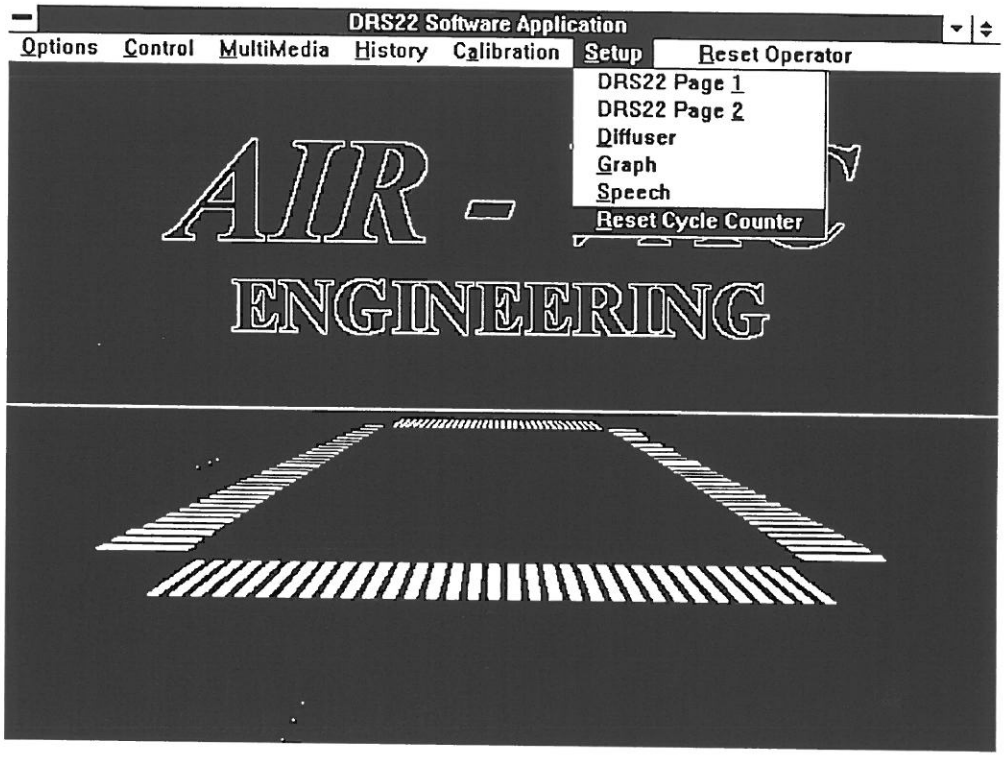

12. ***Software check for RAM memory usage.***

- The software checks for free (available) memory during the run, calibration, save, manual, backup and restore screens. A setup parameter (setup - page 1: *% Free Memory*) is used to determine when the free memory is too low. Typically, the parameter will be set to 80%. For example, when less than 80% memory is free (degrading memory condition), the process is terminated and the operator is informed. This parameter can be 1-100%.

Setup - Page 1

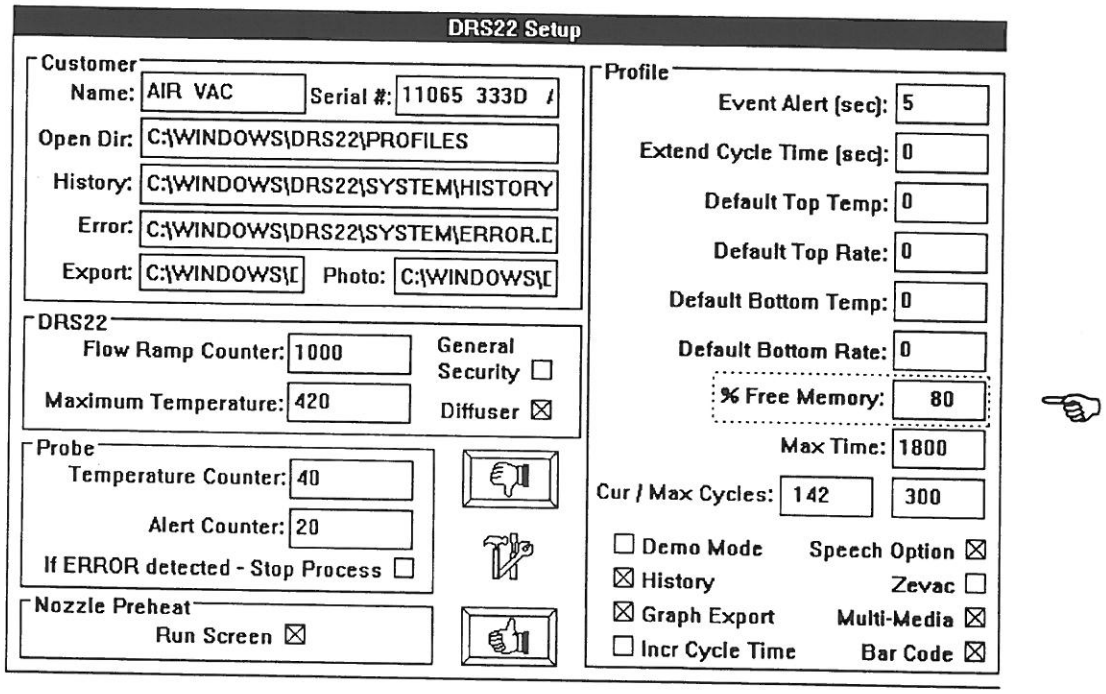

Low Memory Message

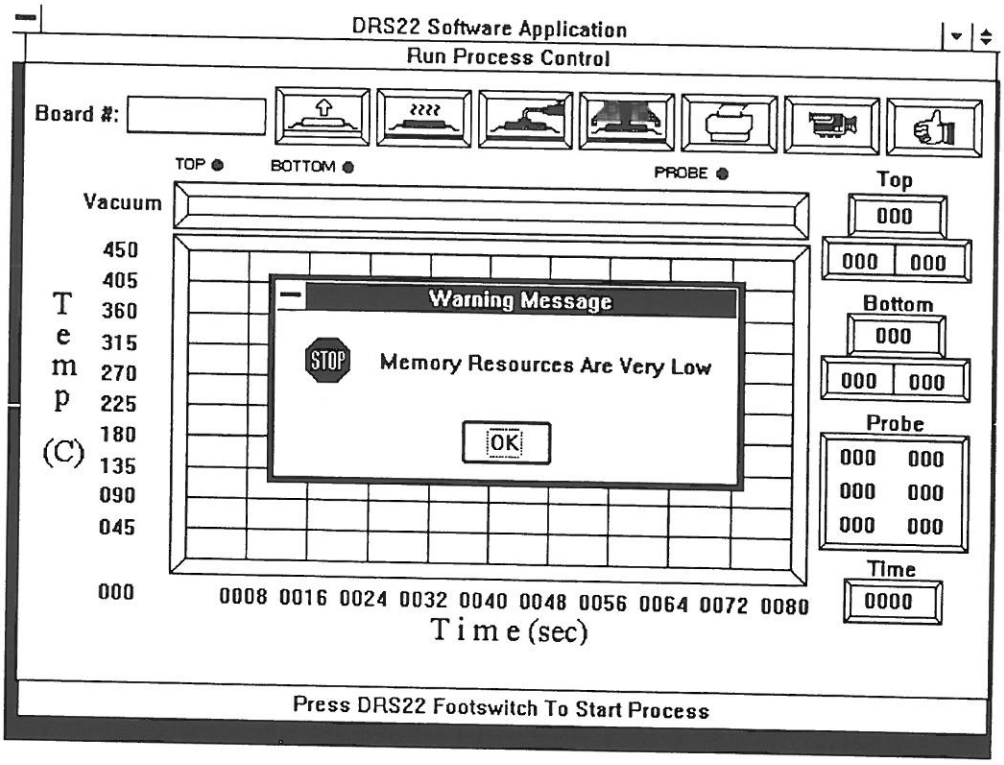

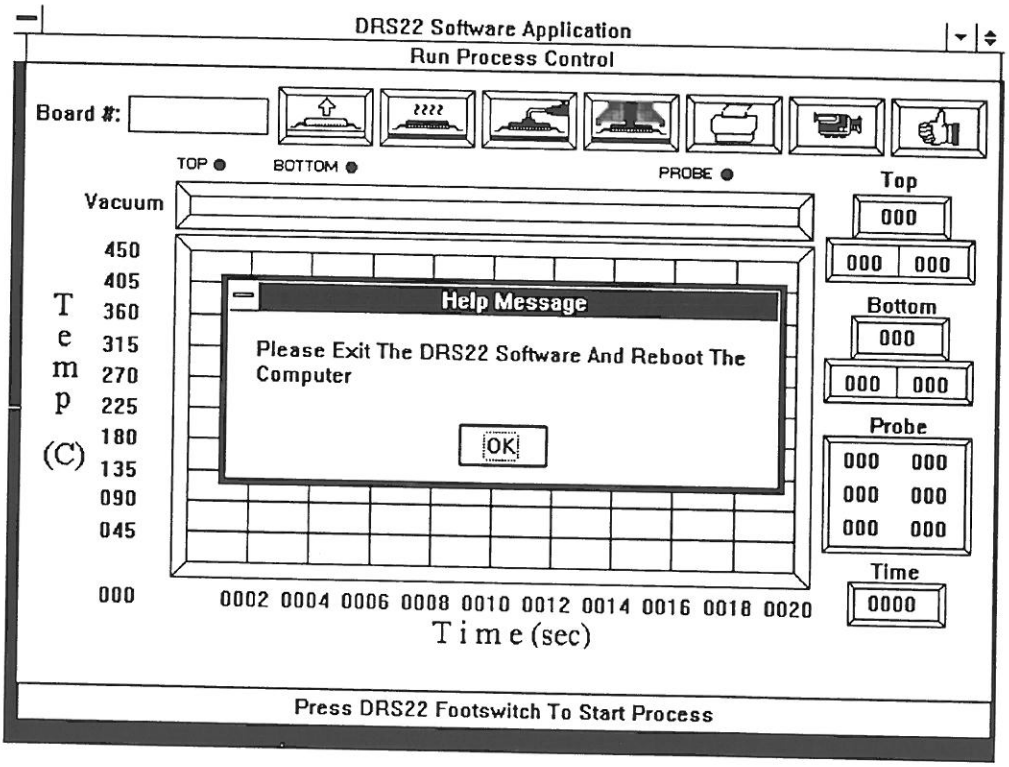

13. ***Improved thermocouple sampling rate.***

- The sample logic used to measure probe temperatures has been modified from once every 3 seconds, to several times per second. This allows the probes to more quickly react to rapid changes in temperature. In addition, this allows the probe/alert counter to be reduced, thus providing better (and more stable) probe trigger logic.

Thermocouple Control Parameters

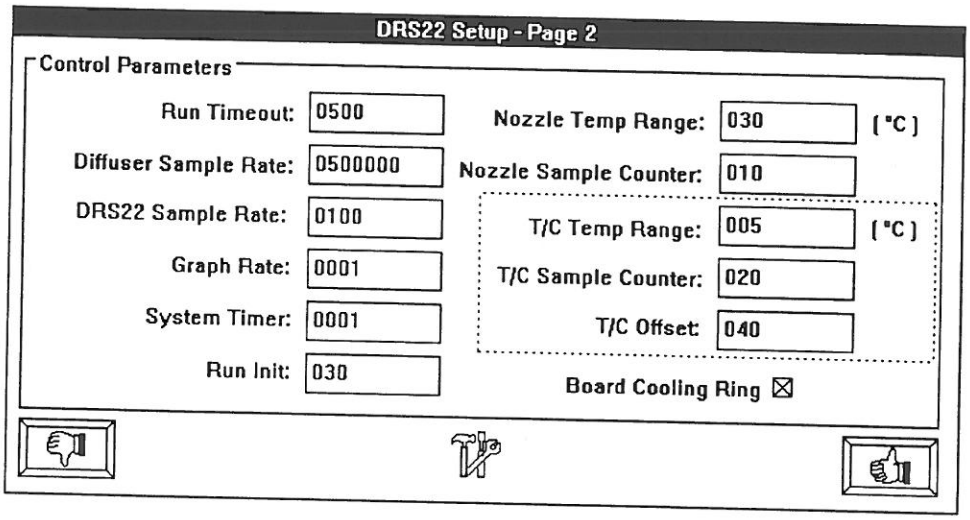

14. ***Double heater diffuser control logic.***

- The diffuser check box, located the setup page (setup - page 1: *Diffuser*), has 3 states: clear, X, or solid. The X state is for a single heater diffuser; the solid box is for the double heater diffuser. A double heater diffuser system will sample both heater controllers and average the values. This average value is displayed to the operator. If this value appears to be half of the desired set point temperature, there is a problem with one of the heaters or controllers.

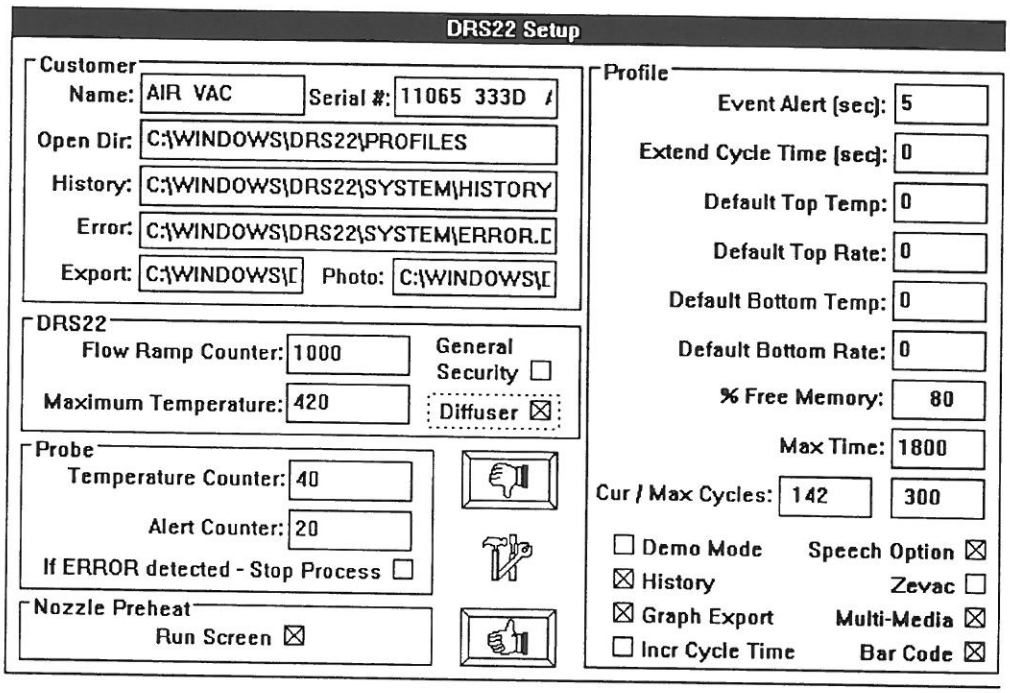

15. ***Diffuser idle control moved to a separate menu option.***
    - The diffuser idle parameters have been moved to a separate menu option located on the main *Setup* menu.

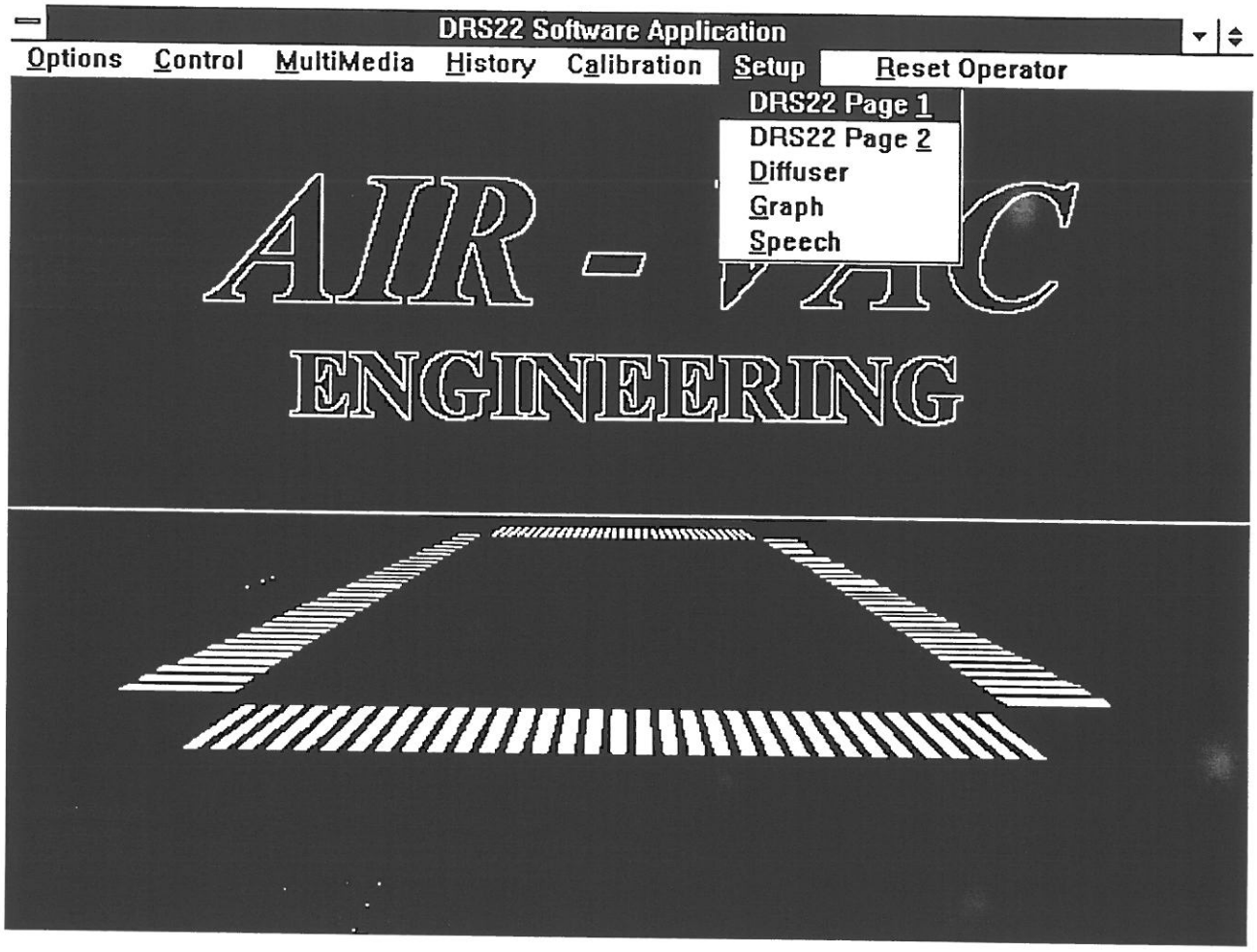

Idle Control Screen

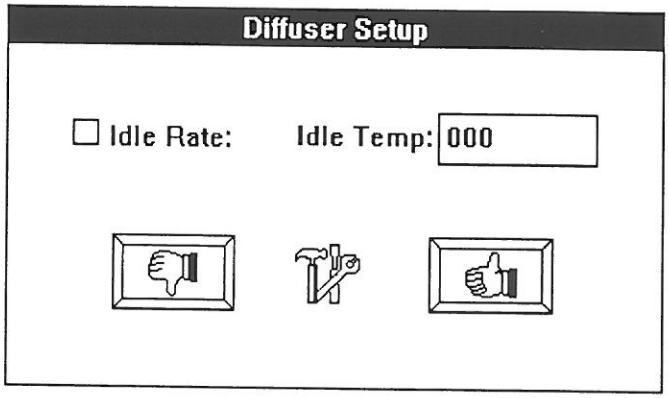

16. ***Proportional valve controlled cooling ring.***

- A setup parameter (setup - page 2: *Cooling Ring*) will allow the *Teach* screen bottom heater controls (up/down spin buttons) to be used with the board cooling ring. The flow rate can be programmed between 1-100%. Pressure (1-40 psi) can be modified to provide the best flow rate range for the cooling ring.

Setup - Page 2

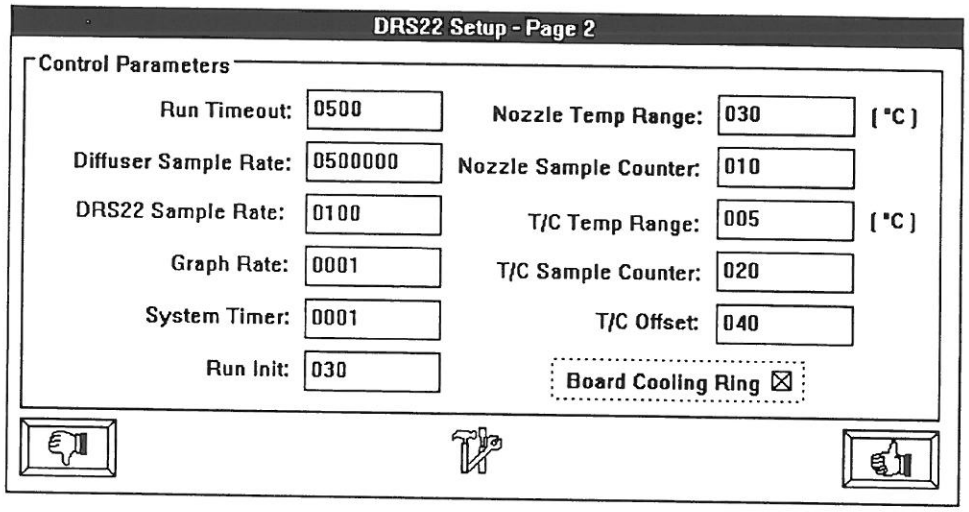

Teach Screen Displaying Board Cooling Controls

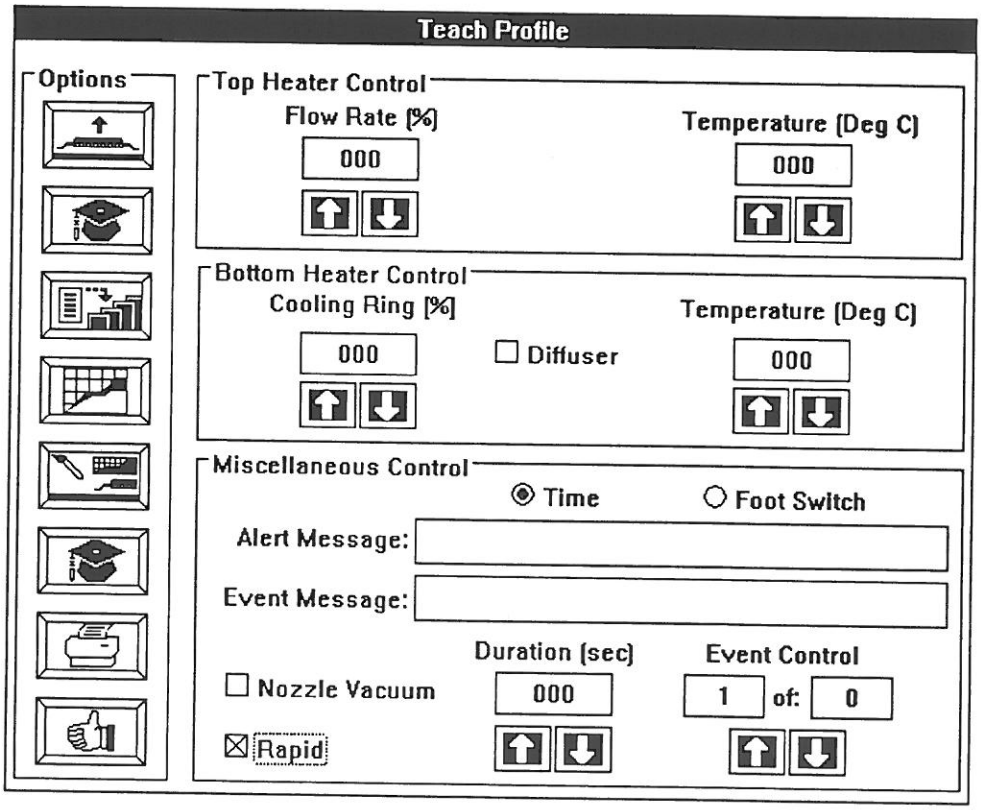

17. ***User defined messages.***

- All software messages are stored in an external file (message.txt) and can be modified by the customers.

File name / location: C:\WINDOWS\DRS22\SYSTEM\MESSAGE.TXT

Changes Have Not Been Saved - Continue ?
Security Access Failed
Continue With Delete Profile :
Delete Profile FAILED
Delete Profile Was Canceled
No Profile Open
Continue With Delete RUN FILE ?
Delete RUN FILE Failed
Delete RUN FILE Was Canceled
Continue With Delete ERROR FILE ?
Delete ERROR FILE Failed
Delete ERROR FILE Was Canceled
There Is No Graph Data Available
A Profile Must Be Open Before Continuing
Profile Save Completed
An Operator Name Must Be Entered
This Name Is Not A Registered Operator
This Operator Registration Has FAILED
This Password Is Not Correct
An Operator Was Not Selected
File Export Was Not Completed
Replace
File Export Completed
This File Does Not Exist:
Memory Resources Are Very Low
Please Exit The DRS22 Software And Reboot The Computer
The Heater Calibration Files Were Not Found
Profile Save Was Not Completed
This Directory Already Exists
Continue With Delete Directory:
Delete File FAILED
Delete Directory FAILED
Delete Directory Was Canceled
Incorrect Drive - Setting To Drive [a:]
Continue Profile Backup ?
Profile Backup Was Canceled
Continue Restore Profile ?
Restore Profile Was Canceled
RUN FILE Is Empty
ERROR FILE Is Empty
Press DRS22 Footswitch To Start Process

Warning... Low Pressure Detected
The Preheat Event Has Been Activated
Warning... PROCESS STOPPED... Probe Temperature Did Not Reach Set Point
Heater Warm Up... Please Wait
Calibration... Make Any Heater Adjustments
Profile BACKUP Complete
Profile RESTORE Complete
Press Footswitch To Continue...
...press footswitch to continue...
operator... please follow all instructions...
do not press footswitch...
until the computer prompts you for this...
The Process Has Been Activated
File Exists - Overwrite ?
********** PROCESS ERROR - Probe 1 **********
********** PROCESS ERROR - Probe 2 **********
********** PROCESS ERROR - Probe 3 **********
********** PROCESS ERROR - Miscellaneous **********
Maximum Profile Time: 1 -
Please Use The TEACH Function To Adjust The Maximum Profile Time
Process Counter Has Exceeded The Maximum, Please Reset The Counter
Waiting For DRS22 Interface - Please Wait...
Seconds
A Bar Code Is Required
A Photo File Was Not Entered
A Photo File Was Not Selected
The DRS22 Communication Link - FAILED
A Control Thermocouple is Required
Saving Export File - Please Wait...
Continue File Export ?
Cooling Ring [%]
Flow Rate [%]
Cooling Ring
Flow Rate
Temp File - Last Profile Changed By Teach
TrashCan File - Last Profile Deleted By The Operator
Exceeded Maximum Foot Switch Time: 1 -
Delete Directory FAILED - Files Exist
No Items Selected
Invalid Information
Please Reboot The Computer Before Attempting A Backup/Restore

18. ***Vision calibration screen.***

- A separate screen has been added (calibration menu) which includes only those software tools necessary for vision calibration. This screen is unaffected by the new time-out counters which terminate the run and manual screens after a programmable number of minutes - no process activity. This will provide an unlimited amount of time to calibrate the vision system.

Calibration Menu - Vision System

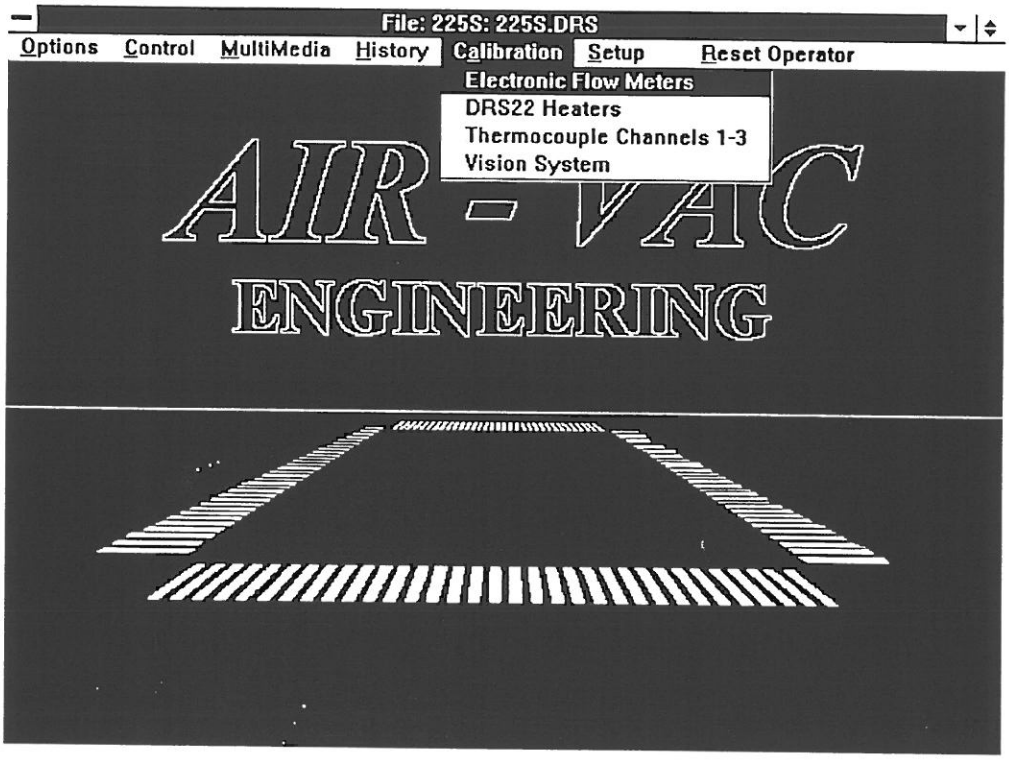

Vision Calibration Screen

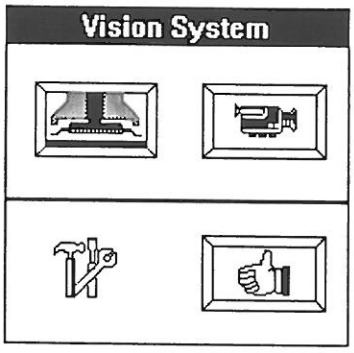

19. ***Unlimited photo storage per process profile.***

- The save option allows unlimited (limited by hard disk drive size) photos (bitmaps) to be stored per process profile. This can be very useful for board identification or step-by-step process instructions. The insert (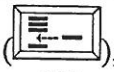), delete (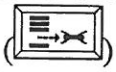) and new (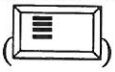) buttons are used to manage the adding or deleting of bitmaps and descriptions.

Multiple Photo Storage Per Process Profile

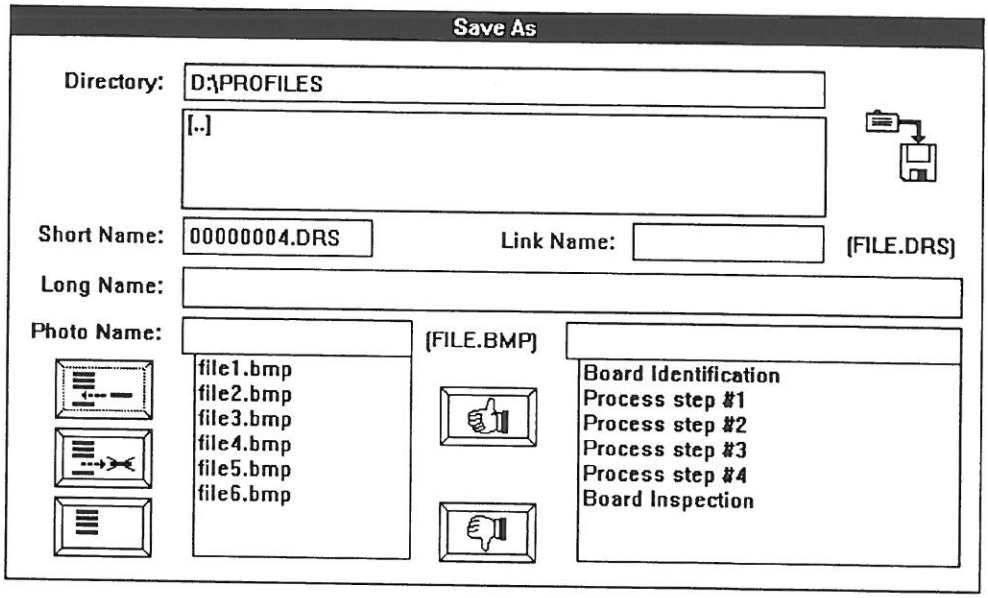

20. ***Directory control moved to a separate menu option.***

- Creating and deleting directories has been moved to a separate menu option located on the main *Options* menu.

Note: This tool can be used to completely remove a directory and its contents. Backups should be routinely performed before any directories are deleted. This option is available only to *high* priority operators.

Options Menu - Directory Maintenance

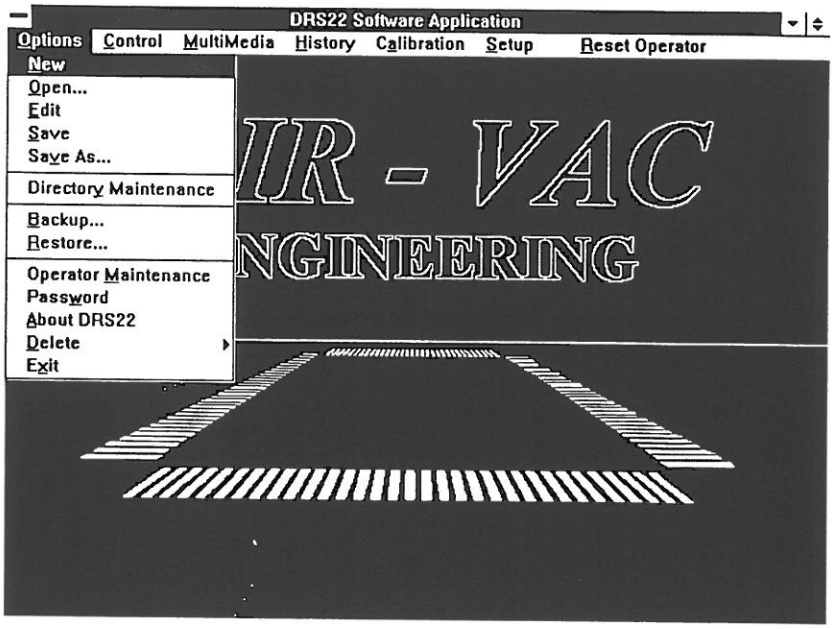

Directory Maintenance Screen

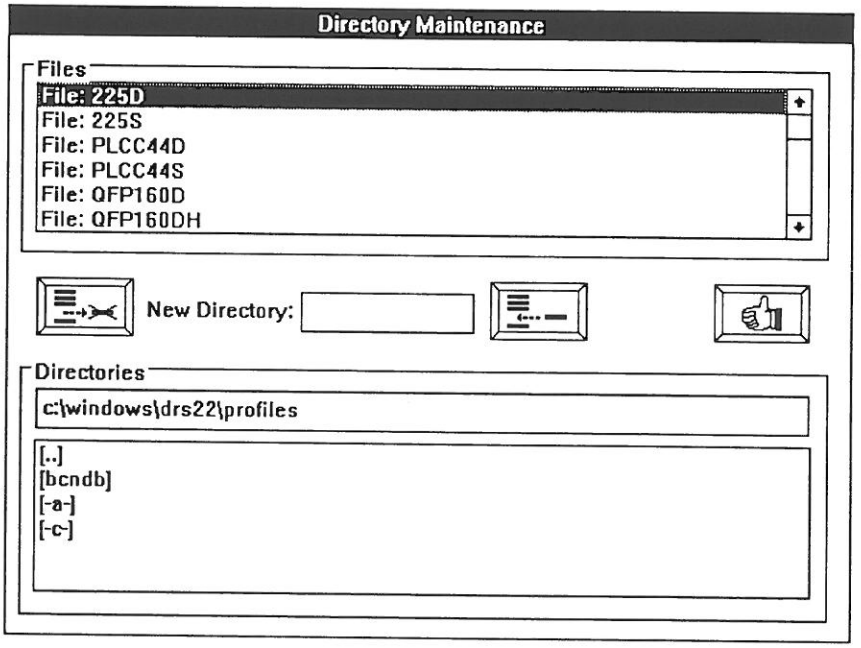

21. New Setup Screens

Setup Screen - Page 1

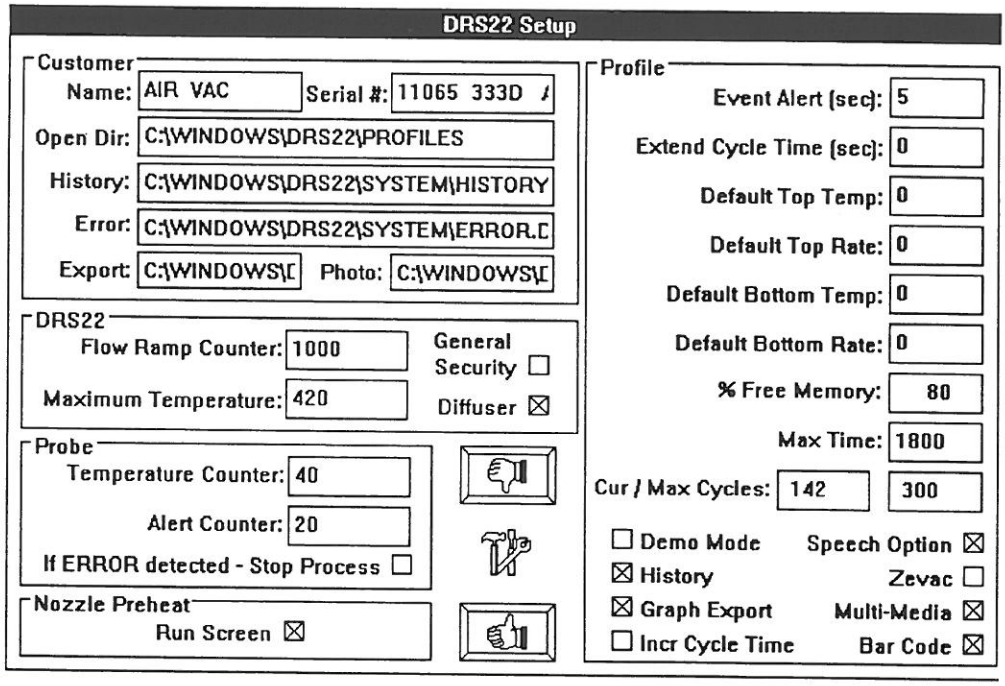

Setup Screen - Page 2

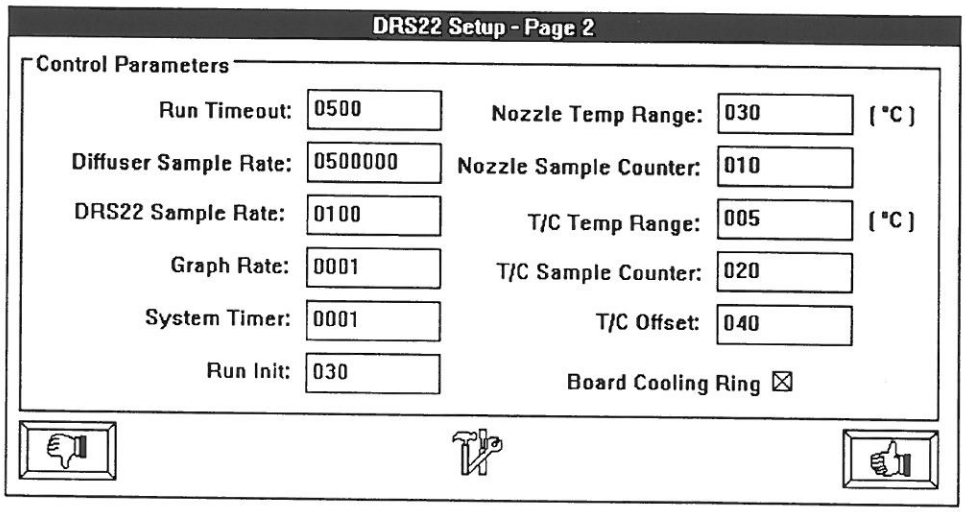

Software Users Manual

Windows Interface Summary

- **Buttons** allow functions or activities to be performed. A Button is selected by moving the cursor within a button region and clicking on the left trackball button.

Teach (blue).

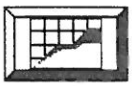 Profile Preview.

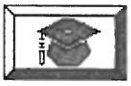 Delete (red).

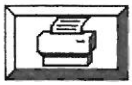 Print.

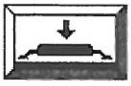 Solder Profile.

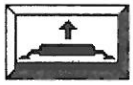 Desolder Profile.

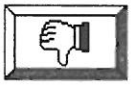 Cancel.

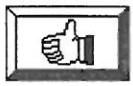 O.K.

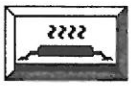 Top Preheat.

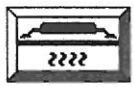 Bottom Preheat.

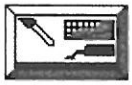 Probe Temp. Control.

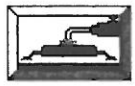 Probe Vacuum.

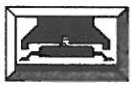 Nozzle Vacuum.

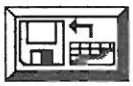 Export Graph Data.

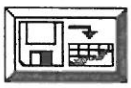 Import Graph Data.

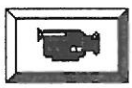 MultiMedia.

Insert *NEW* Event In Between 2 Existing Events.

- **Edit boxes** allow information to be entered by placing the cursor within the box region and clicking on the left trackball button. Character can be entered directly from the keyboard.

Company Name: [ ] Edit Box.

- **Spin buttons** allow the information within the box to be modified by placing the cursor within the up/down arrows region and clicking (or holding down - repeat) on the left trackball button.

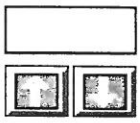

Spin Buttons.

- **Check boxes** allow simple information (on or off) to be selected by placing the cursor within a check box region and clicking on the left trackball button. An ☒ in the check box is used to indicate ***ON*** or active. A ☐ check box is used to indicate ***OFF*** or inactive.

☐ **Alert**

☐ **Nozzle Vacuum**

☒ **Rapid**

Check Boxes.

- **Radio buttons** also allow simple information to be selected, however, this control differs from a check box because only one choice can be selected at a time.

○ **Monitor Only**
○ **Skip To Next Event**
○ **Stop Process**
◉ **Not In Use**

Radio Buttons.

- **List boxes** also allow longer lists of information to be displayed in a small area of the screen. There are 2 options:

  - Full list box:

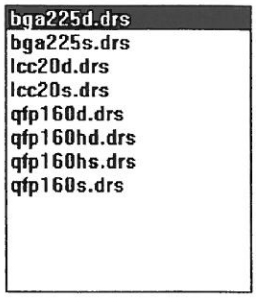

  - Pull-down list box:

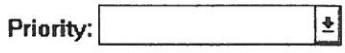

Operator - *Reset Operator / Operator Registration*

Overview - Registering an operator identification code allows the system to monitor, track and record activity (see **DRS22 Setup** and **History**). Operators must be created and assigned a password before access to the system is allowed. Each operator is assigned a priority (security) code (**Low**, **Medium** or **High**) (see **Password**). Operator registrations can be changed at any time by selecting the **Reset Operator** from the main menu.

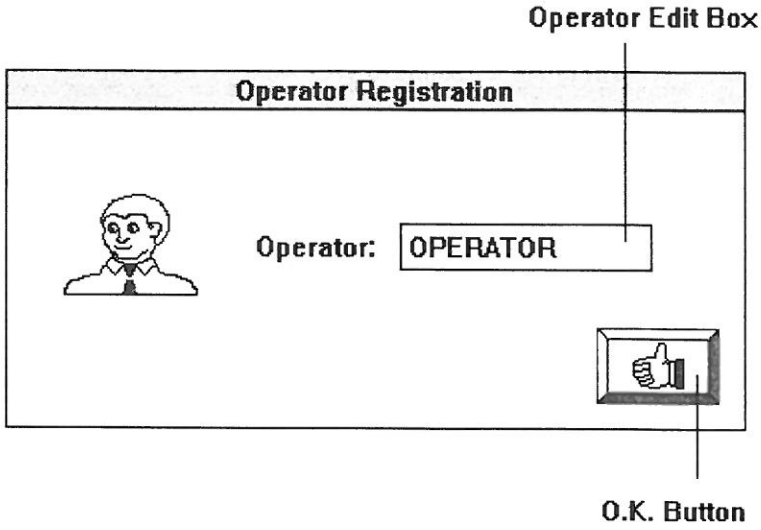

O.K. Button - Click on this button when a valid operator has been entered. A valid operator must be entered to continue. If a valid operator code is entered, the system will then request that a password be entered (see **Password**).

Operator Edit Box - Click on this edit box to enter characters from the keyboard.

Note: This screen is displayed immediately after the software start-up is complete.

Note: The *default operator* is **DRS22** and the *default password* is set to **blank**.

Operator - *Operator Maintenance*

Module	*Low Priority*	*Medium Priority*	*High Priority*
New Profile			yes
Edit Profile			yes
Open Profile	yes	yes	yes
Save			yes
Teach			yes
Run Mode	yes	yes	yes
Manual Mode		yes	yes
Operator Registration (Reset)	yes	yes	yes
Operator Maintenance			yes
Password Maintenance			yes
Backup Profiles		yes	yes
Restore Profiles			yes
Export Graph Data	yes	yes	yes
Import Graph Data		yes	yes
About (Version Control)	yes	yes	yes
History Review		yes	yes
Voice Introduction		yes	yes
DRS22 Setup			yes
Electronic Flow Meters		yes	yes
DRS22 Heaters		yes	yes
Thermocouple Channels 1-3		yes	yes
Run Graph Display Setup			yes
Delete Profiles			yes
Delete History			yes
Main Menu - Live Video		yes	yes
Main Menu - Print Video		yes	yes

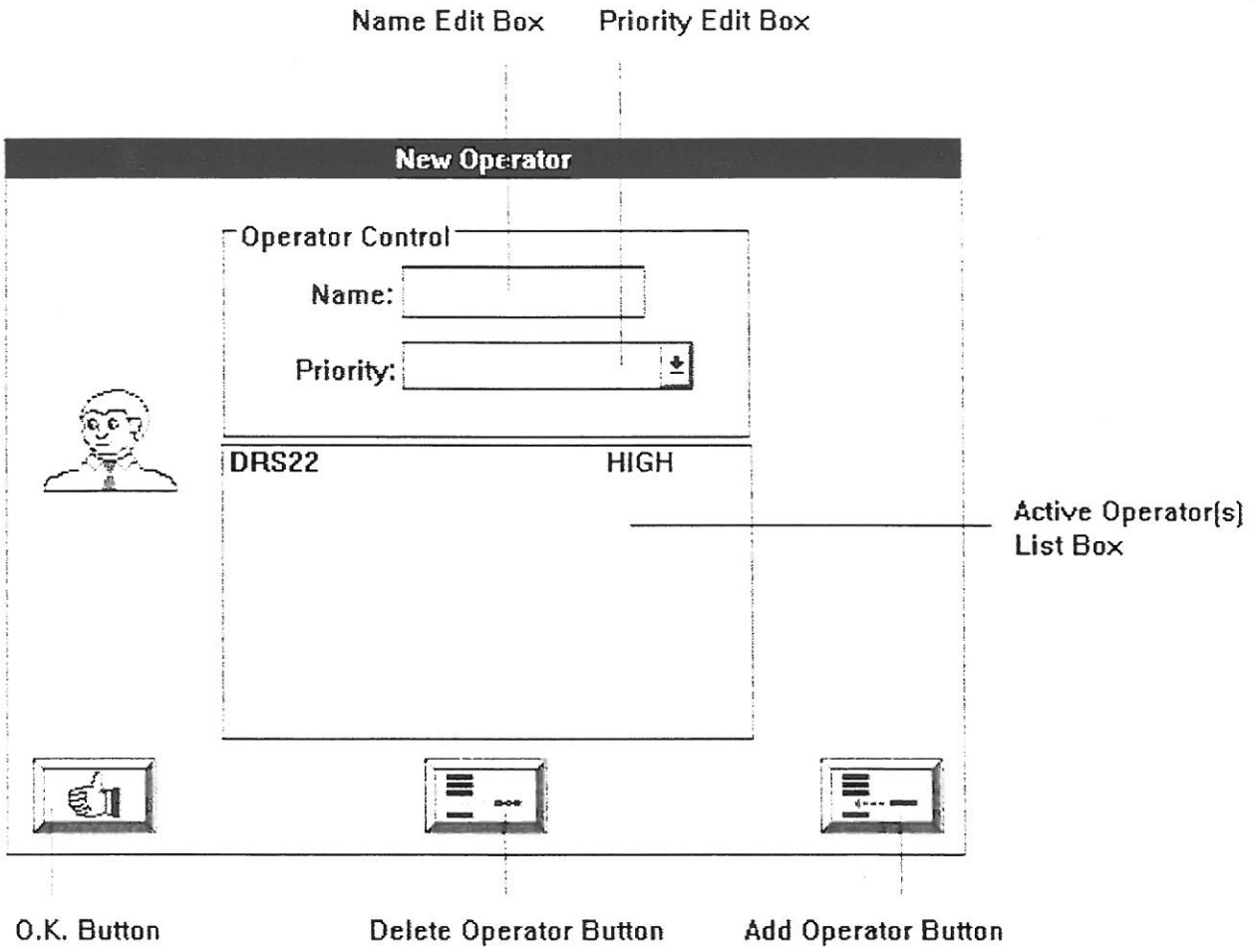

Add Operator• Enter an operator name or code in the **Name** edit box.

- Enter a priority code in the **Priority** edit box.
- Click on the **Add Operator** button.
- Click on the **O.K.** button to return to the **Main** menu.

O.K. Button - Click on this button when all the required operator maintenance activities have been completed.

Add Operator Button - Click on this button to save a new operator. An operator must have a priority (security) and operator code.

Delete Operator Button - Click on this button to delete an *active* operator. An operator must be *selected* before clicking on the **Delete** button. Click in the list box to select an operator.

Operator Name Edit Box - Click on this edit box to enter the name of a ***new*** operator.

Priority Edit Box - Click on this edit box to select/enter the priority of the ***new*** operator.

Active Operator(s) List Box - This list box displays the current (active) operator(s).

Password

Overview - All Operators are assigned to a password priority group (**Low, Medium or High**). These password groups allow security access to the key areas of the software (i.e. **Calibration**, **Setup**). Passwords can be modified to provide complete system security. Passwords can be changed by selecting the **Option** menu (from the main menu) and clicking on **Password**.

Note: All passwords are initially set to blank.

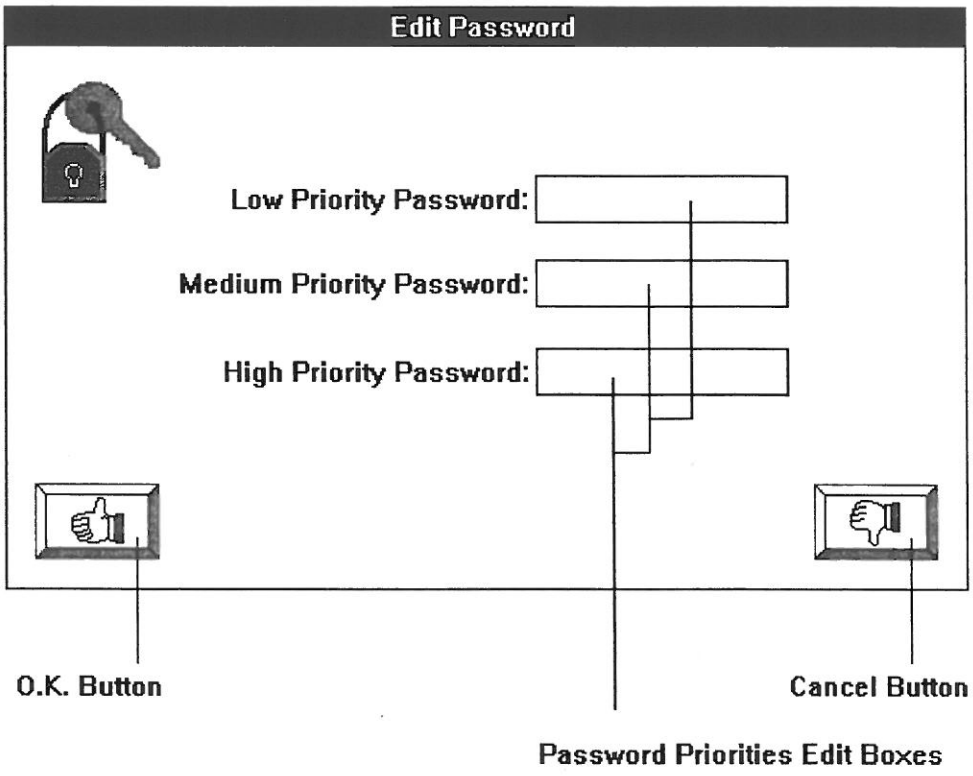

The following screen is displayed before access is allowed to sensitive areas of the software:

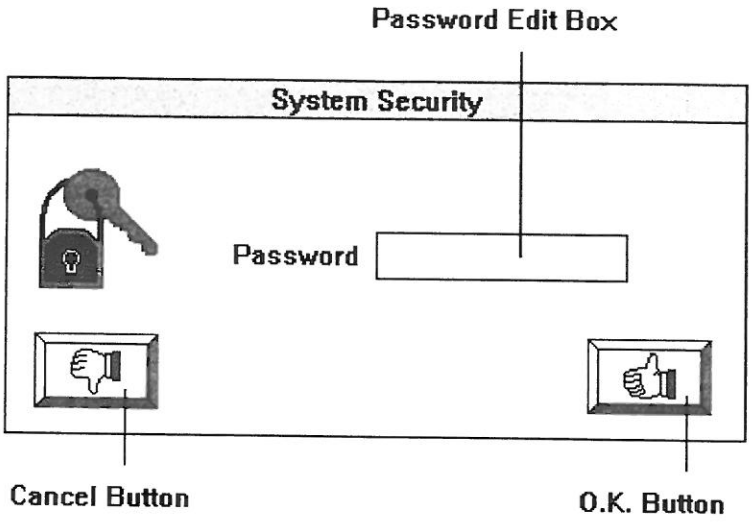

O.K. Button - Click on this button when a valid password is entered. The system will not continue until a valid password is entered. This button is also used only during the change password procedure. Any changes made to a password can be saved to the disk by clicking on this button.

Note: If an operator priority code is set to **High** (see **Operator**), the system will not stop to request a password after the initial operator registration procedure.

Cancel Button - Click on this button to return to the previous screen without entering a password.

Password Edit Box - Click on this edit box to enter characters from the keyboard. Password characters are displayed as the asterik character (*) when a security password is setup.

Change Password

- Select the **Option** menu (from the main menu) and click on **Password.**
- The existing password must be entered by clicking on the password edit box and entering the required characters. At this point all characters are display as (*).
- After correctly entering the password (and clicking on the **O.K.** button), the (*) will be replaced with letters.
- A new password can be entered.
- Select the **O.K.** button will save the changes to the disk and return to the **Main** menu.

New/Open/Edit

- Detail page 1

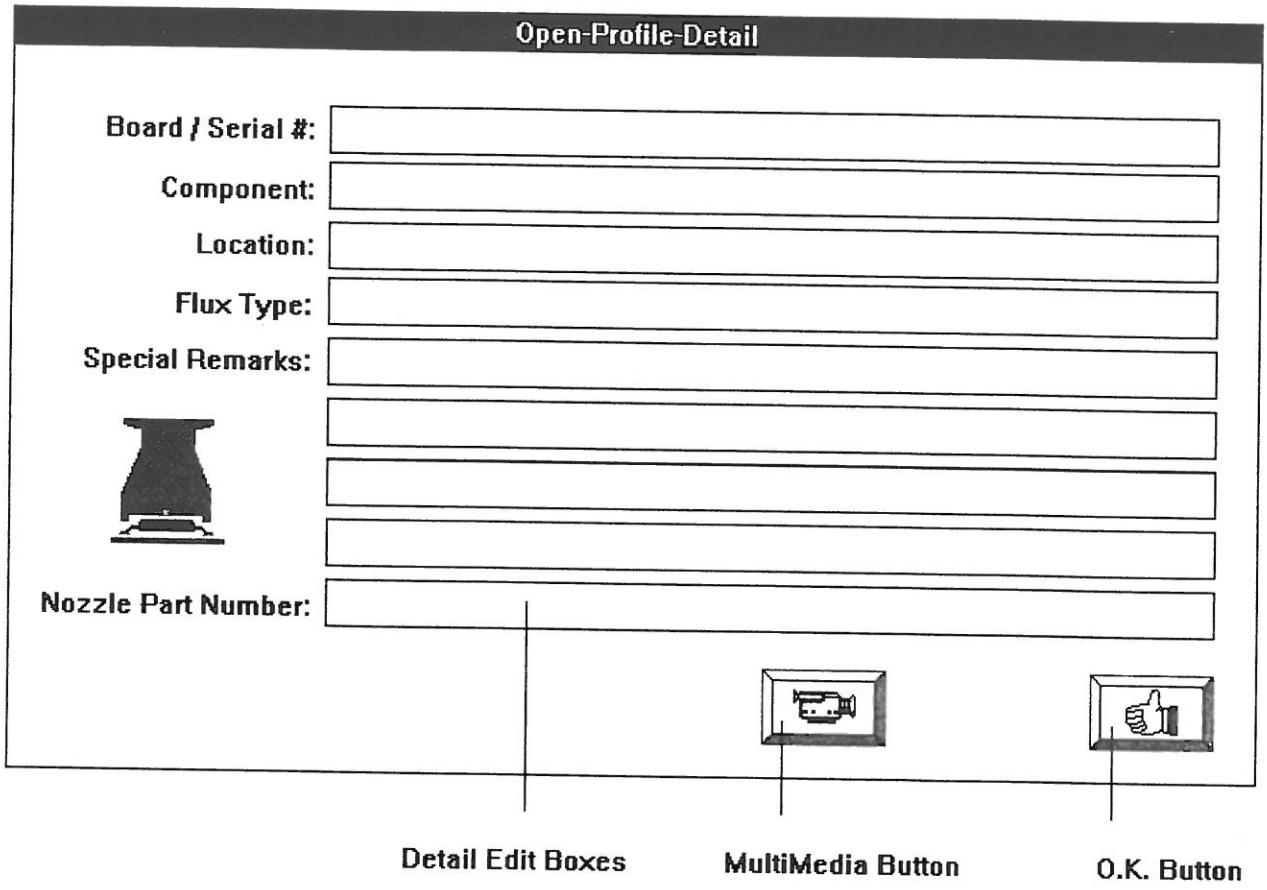

Overview - The **Detail** and **Notes** pages allow specific application information to be entered and saved with the profile control parameters. Access to this screen is accomplished by selecting the **Option** menu (from the main menu) and clicking on **New** or **Edit**. This information is also displayed during the **Open** option.

- Detail Page 2

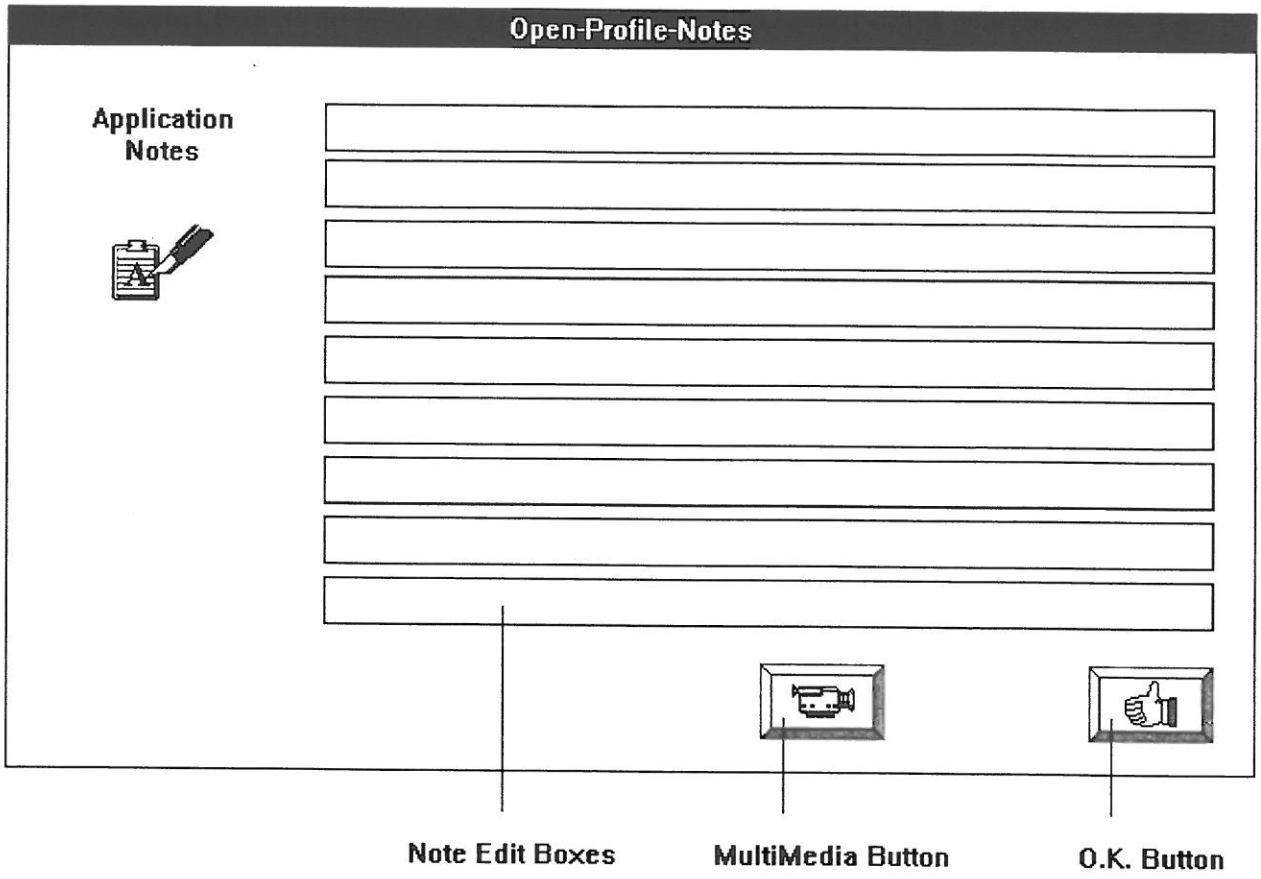

Detail / Notes Edit Boxes - Click on any of these edit boxes to enter information from the keyboard.

Note: The **Open Option** will not allow any changes to be made.

O.K. Button - Clicking on this button, when all the desired information has been entered, will allow the system to continue to the next screen.

MultiMedia Button - This button is available in the **Open** and **Edit** options. Video information can be captured and saved with the profile control parameters (see **MultiMedia** option and **Save As** option). Clicking on this button will display any video information that was saved with the profile.

Teach

Overview - Teach provides a technique for developing and modifying the specific process control profile parameters. This option can be accessed by selecting the **Control** menu (from the main menu) and clicking on **Teach**.

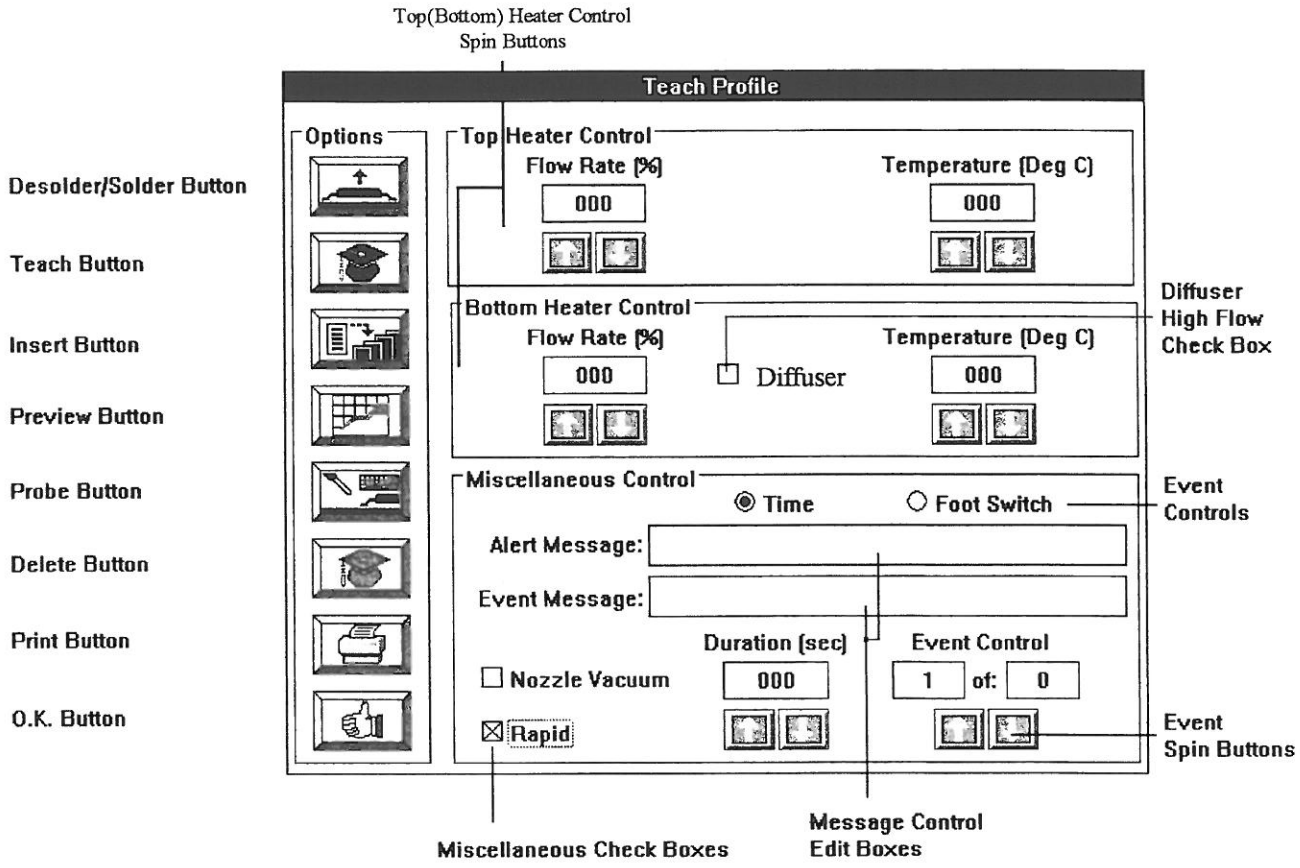

Top (Bottom) Heater Control Spin Buttons - These groups of spin buttons allow process parameters (flow rate and temperature) to be set for a specific event. A profile can be created with many events to allow complex temperature profiling. The **Diffuser** check box can be used for machines that have the bottom diffuser option installed. This option allows a high air flow solenoid to be activated. This solenoid is connected to the diffuser and substantially increases the bottom heater flow rate. The diffuser is an option to the existing DRS22 bottom heater which distributes the heated air over a greater surface area.

Note: The temperature spin buttons allow the probe temperature set point to be adjusted. The operator can also click in the temperature edit boxes and enter a value using the keyboard.

Diffuser Check Box - This check box can be used for systems that have the diffuser option (DF100) is installed. This option allows much higher flow rates to be generated through the diffuser. When the check box is selected (■ = High Flow (9 scfm), ☒ = Low Flow (3 scfm)) the bottom flow rate spin buttons are disabled. The diffuser flow rate can be turned OFF by clearing the check box (□).

Desolder/Solder Buttons - This button defines a control profile as solder or desolder. Correctly defining the profile is important for file linking (see **Save** option) and provides a quick visual reference for the operator.

Event Spin Buttons - This set of spin buttons allow profile events to be scrolled for viewing or editing.

Miscellaneous Check Boxes

Time - this radio button allows the event to be time-based. Events that are time-based must have a duration (seconds). During the duration of the event, the graph and digital temperature will be plotted in real-time. An audible tone is activated during the last 5 seconds of a time-based event (this time length can be defined by the user from the **DRS22 Setup** option).

Note: If a time-based event is created, the operator must be sure to enter a duration value *greater* that zero. This is also *true* even if the event will be controlled by the thermocouple probes.

Footswitch - this radio button allows the event to be footswitch-based. Events that are footswitch-based ***MUST*** have a zero duration (seconds). The system will wait until the operator presses the footswitch before continuing. During a footswitch event, the graph and digital temperature will ***not*** be plotted in real-time. After the footswitch is pressed, the graph will be re-displayed showing all the information that was monitored during the footswitch event.

Event Message - any text entered into this edit box will be displayed during the entire duration of a time or footswitch-based event.

Alert Message - ant text entered into this edit box will be displayed during the last 5 seconds of a time-based event.

Note: The DRS22 software has a speech (voice) option. This option can be used to ***TALK*** to the operator via the Event and Alert messages. If the Speech option is activated (**DRS22 Setup** option), then all messages will be converted from text to speech through the speech synthesizer card (see **Appendix C** for hardware options or **Appendix A** for text-to-speech rules). If the speech option is not active the system will alert the operator by an audible tone.

Rapid - this check box allows the spin buttons (up/down) to be more precisely controlled (☒ = 10, ☐ = 1).

Nozzle Vacuum - this check box allows the nozzle vacuum to be automatically activated for the entire duration of a specific event.

Duration - these spin buttons provide the ability to set the maximum time limit for a time-based event.

Teach Button - This button must be selected to ***TEMPORARILY*** save new events or any changes made to existing events (including changes made to the probe screen).

Note: The **Save** option must be used to permanently save any changes made to profiles.

Insert Button - This button must be selected when a new event must be inserted in between 2 existing events. The new event will be inserted behind the current event. The new event will be initially setup as a time-based event with zero values.

Preview Button - This button allows the currently taught profile events to be graphically displayed for a theoretical analysis.

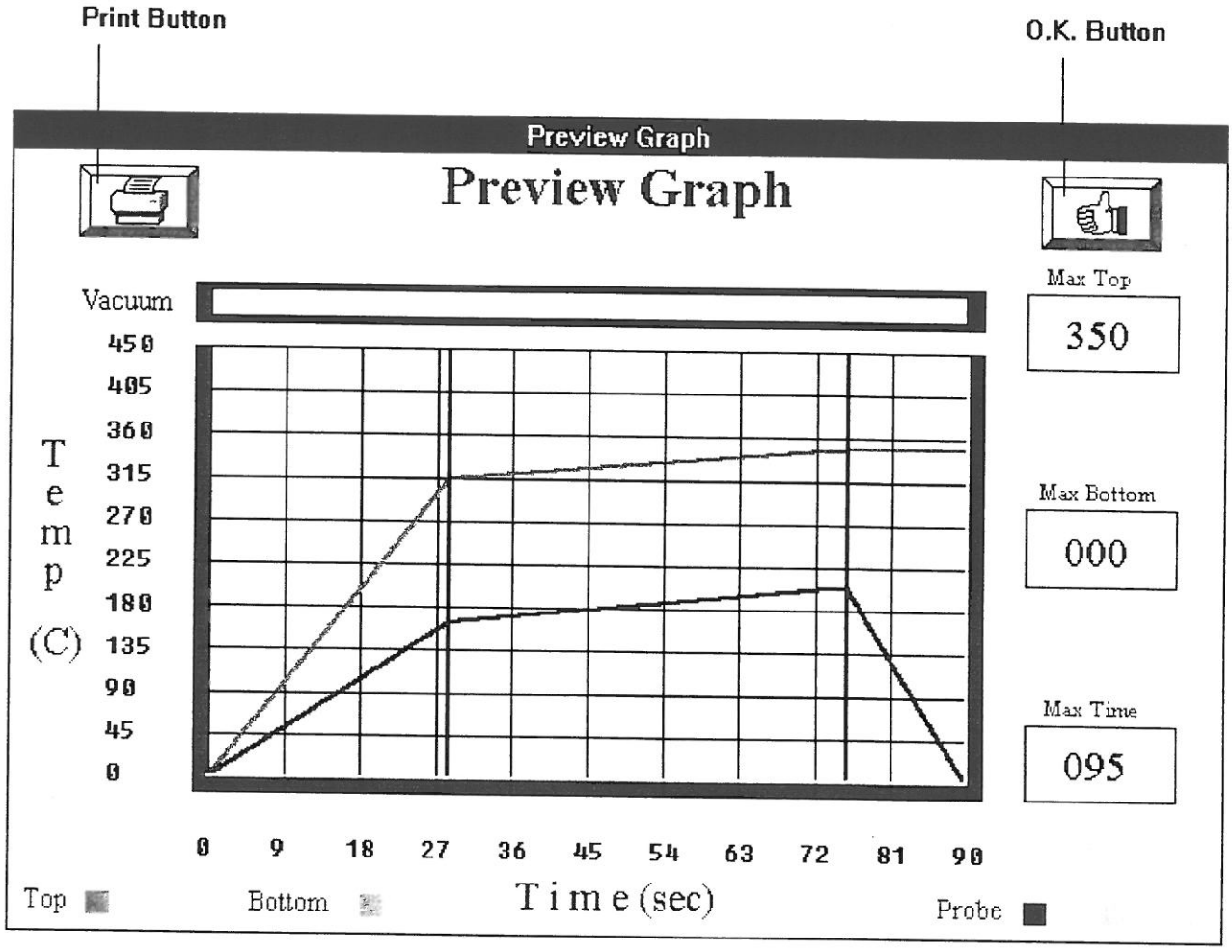

O.K Button - This button returns the operator to the **Teach** screen.

Print Button - The print button located on the **Preview** screen prints the theoretical analysis graph on the printer and returns the operator to the **Teach** screen.

Delete Button - This button deletes the current event.

Print Button - The print button located on the **Teach** screen prints all the profile and probe control parameters.

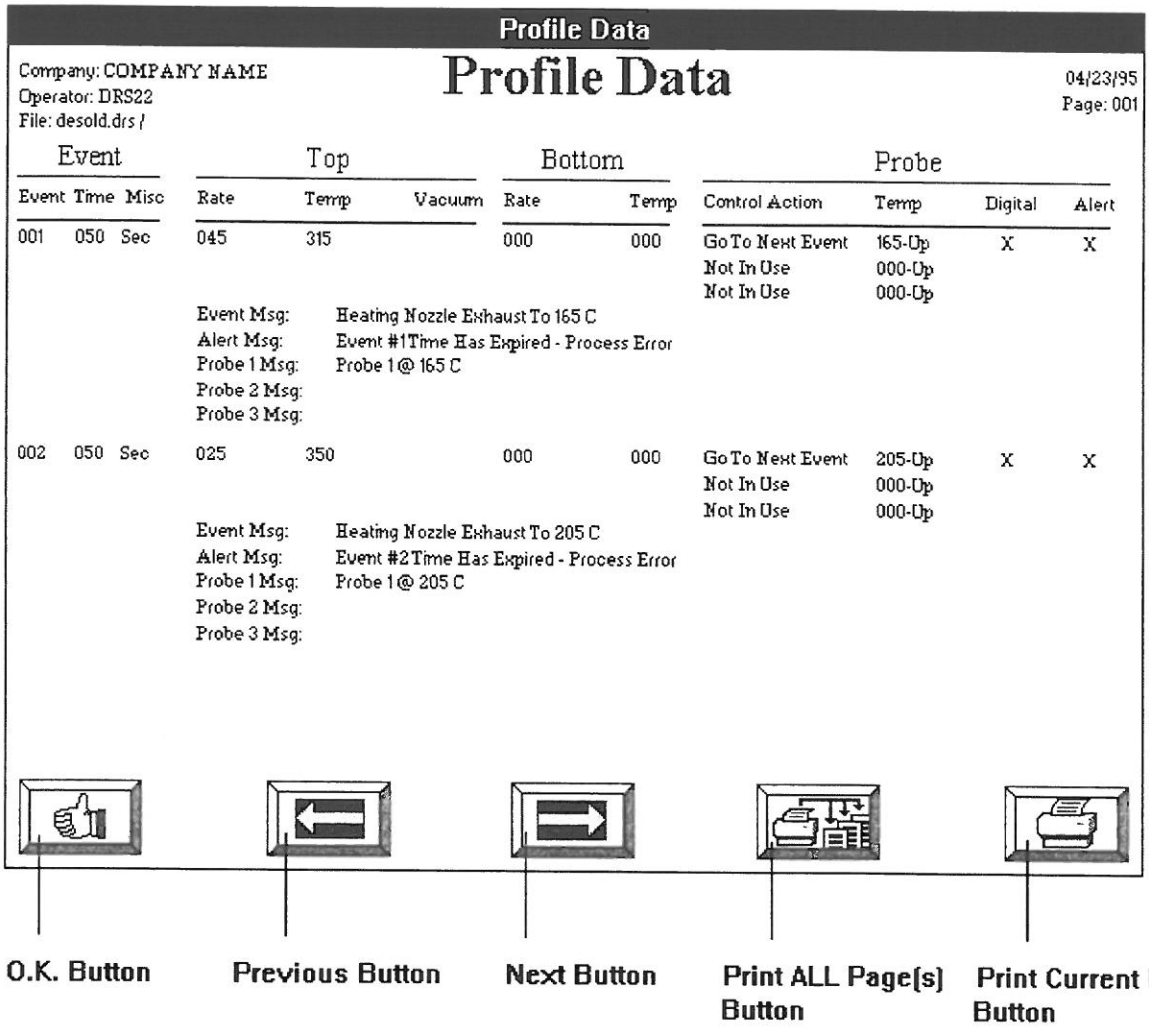

O.K. Button - This button will return the operator to the teach screen.

Previous Page Button - This button will display the previous page of information.

Next Page Button - This button will display the next page of information.

Print ALL Button - This button will print all the page(s).

Print Button - This button will print the current page.

O.K. Button - This button will return the operator to the main menu

Probe Button - This button will access the probe control screen and allow process control information to be entered. Each event can have different probe control information for complex application profiles.

Note: Each thermocouple port accepts K-type sensors. These sensors can be used to monitor the temperature of the board or adjacent components. The Air-Vac HFC nozzle design provides real-time, temperature-based process control for BGA devices.

Note: These thermocouple ports do not provide isolation between the input and the output, therefore, an ungrounded thermocouple junction is suggested. Air-Vac part# for ungrounded thermocouple - TC3-08.

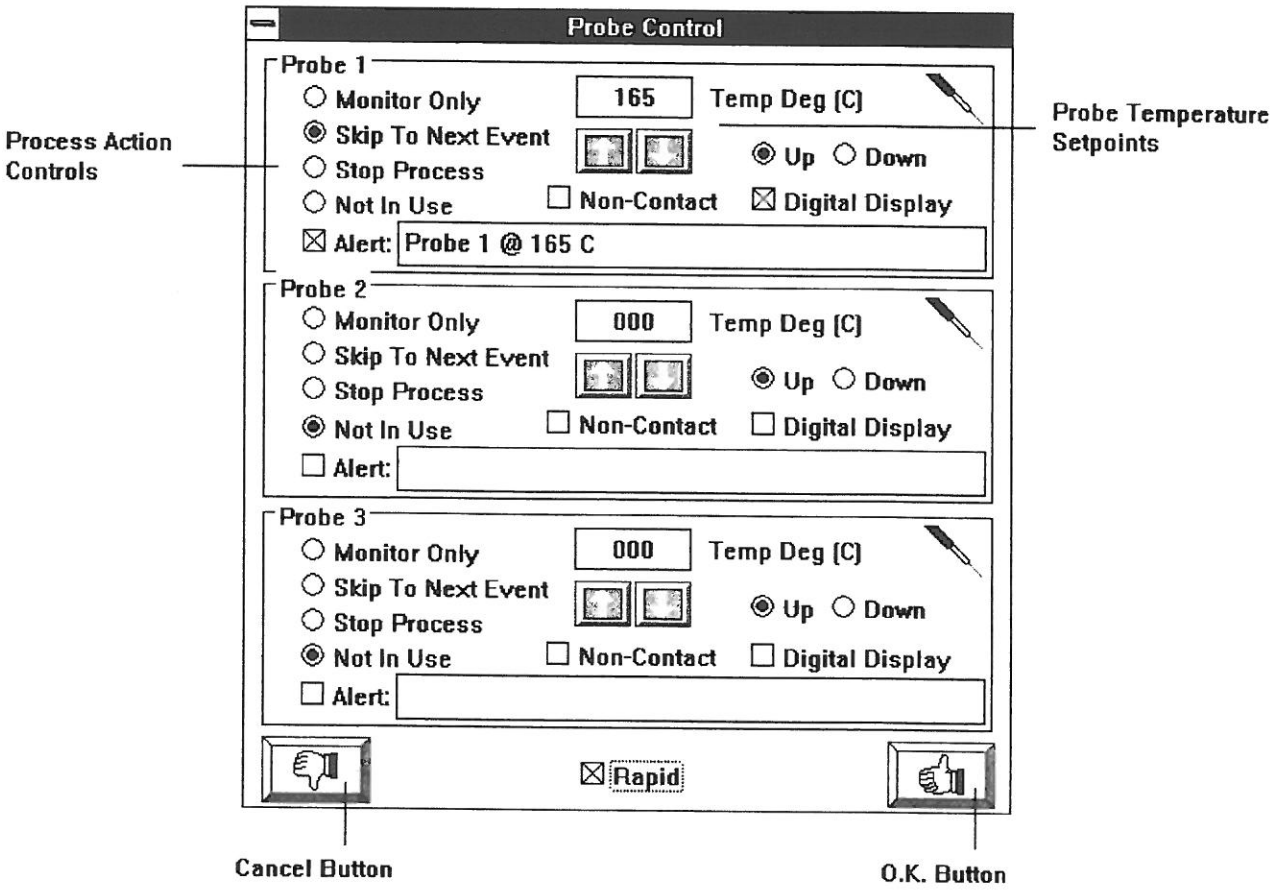

O.K. Button - This button will cancel the probe screen ***TEMPORARILY*** saving any changes.

Note: The teach button must be selected to record any profile or probe changes.

Note: The **Save** option must be used to permanently save any changes made to profiles.

Cancel Button - This button will cancel the probe screen without saving any changes.

Process Action Control Buttons - This set of button allows complex probe control information to be setup for a specific event.

- **Monitor Only:** Plots the probe temperature without providing any process control.

- **Skip To Next Event:** Plots the probe temperature in addition to providing the following process control: When a sample probe temperature is detected that is equal to or higher than the probe temperature set point (see **DRS22 Setup** screen: **Probe Temperature Counter** parameter), **Skip To Next Event** will terminate the currently running event and activate the next sequential event process control parameters. This parameter can be defined (**DRS22 Setup**) to stop the process if the set point temperature is *not* reached ***or*** allow the process to continue.

- **Stop Process:** Plots the probe temperature in addition to providing the following process control: When a sample probe temperature is detected that is equal to or higher than the probe temperature set point (see **DRS22 Setup** screen: **Probe Temperature Counter** parameter), **Stop Process** will terminate the currently running event and terminate all remaining profile events.

- **Alert:** When a sample probe temperature is detected that is equal to or higher (lower if **Down** is selected) than the probe temperature set point (see **Setup** screen: **Probe Alert Counter** parameter), **Alert** will activate an audible tone.

- **Alert Message** can be used to provide the operator with an application specific message during the probe audible tone.

Note: The DRS22 software has a speech (voice) option. This option can be used to ***TALK*** to the operator via the Event and Alert messages. If the

Speech option is activated (**DRS22 Setup** option), then all messages will be

converted from text to speech through the speech synthesizer card (see **Appendix C** for hardware options or **Appendix A** for text-to-speech rules). If the speech option is not active the system will alert the operator by an audible tone.

- **Up/Down:** These radio buttons tell the system whether to look for increasing or decreasing probe temperatures (i.e. If a cool down event is desired the **Down** radio button should be selected).

- **Digital Display:** These check boxes determine whether a probe will be digitally displayed on the **Run** screen (all active probes are graphically plotted).

- **Non-Contact:** The DRS22 system has an optional I/R non-contact probe. If this option is installed, select the **Non-Contact** check box. The DRS22 software system allows a maximum of the 3 probes. Any combination of contact and non-contact probes can be used (see **Appendix C**).

- **Not In Use:** disables the probe.

- **Rapid** - this check box allows the spin buttons (up/down) to be more precisely controlled (☒ = 10, ☐ = 1).

Note: The temperature spin buttons allow the probe temperature set point to be adjusted. The operator can also click in the temperature edit boxes and enter a value using the keyboard.

Teach Summary

Note: The teach button must be selected to record any changes made to the event or probe screen.

Note: The **Save** option must be used to permanently save any changes made to profiles.

Note: Parameters stored with each event are:

Nozzle flow rate and heater temperature.
Bottom flow rate and heater temperature.
Nozzle vacuum.
Audible event alert.
Event message.
Events are time-based or footswitch controlled.
Probe process action controls.
Probe temperature set point.
Audible probe alert.
Probe messages.

Note: Zero temperature events are very useful when properly used:

1. An event with zero nozzle temperature and a zero nozzle flow rate can be used to display probe temperatures after a component has been placed and soldered - this provides the ability to monitor the component temperature before raising the nozzle.

2. An event with a nozzle temperature of 1 deg C and a positive flow rate can be used to cool down a nozzle.

Note: Be sure to properly define the solder/desolder button. This indicator is used in file linking and may cause problems if not properly defined.

Save

Overview - This screen allows profile names to be created, changed and saved. Additionally, profiles can be linked together to create a soldering/desoldering profile system. Access to this feature can be accomplished by selecting the **Option** menu (from the main menu) and clicking on **Save** or **Save As.**

Desolder Profile

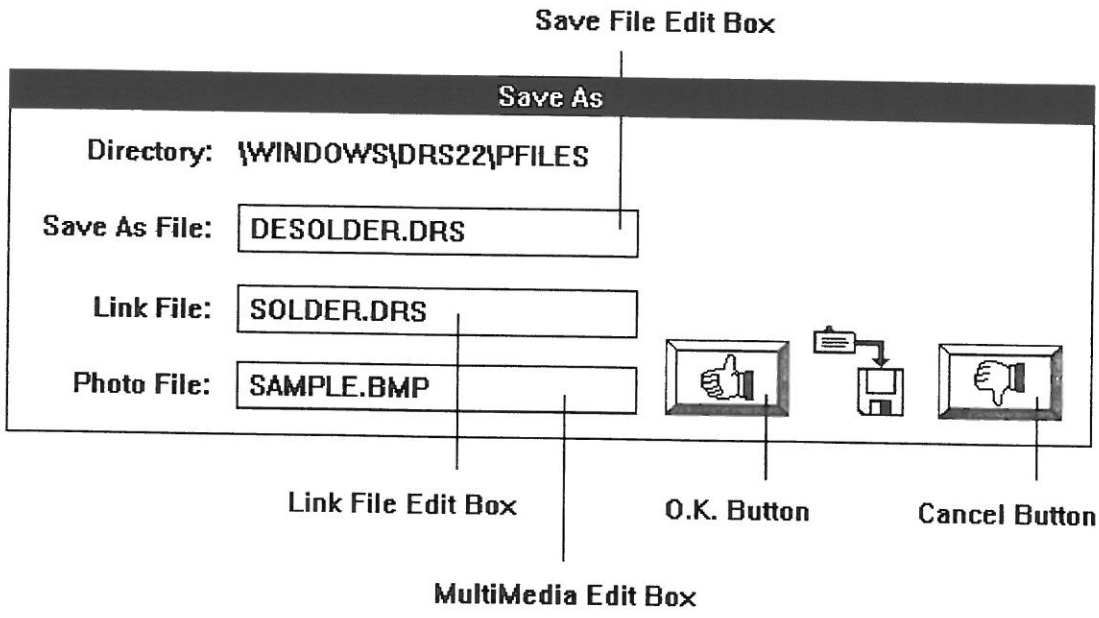

Solder Profile

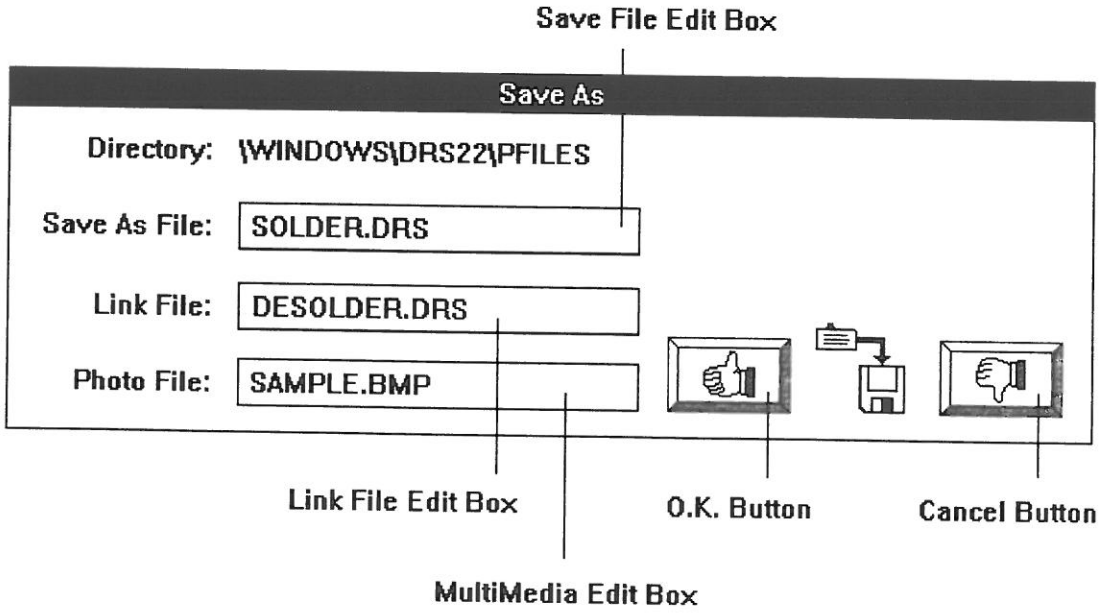

Save File Edit Box - Click on this edit box and enter characters from the keyboard. An existing file name can be changed to a new file name without affecting the existing file (**Save As**).

Link File Edit Box - Click on this edit box and enter characters from the keyboard. The **Run** screen provides a button to toggle between two linked profiles. To properly link a solder and desolder profile the above example should be followed.

Note: The file and link name must have the extension **.DRS** included as part of the name. This extension is required by the software to correctly identify profile names. Profile linking will ***not*** work unless this extension is added. The format for a file name is a maximum of 8 letters or numbers followed by the **.DRS** extension.

Photo File Edit Box - Click on this edit box and enter characters from the keyboard. The **Edit** and **Open** options provide a multimedia button which can be selected to display this video image. All video image files are automatically saved in the following directory: c:\windows\drs22\photo.

Note: All photo file names must have the extension **.BMP** included as part of the name. This extension is required by the software to correctly identify video image names. Photo file will ***not*** work unless this extension is added. The format for a file name is a maximum of 8 letters or numbers followed by the **.BMP** extension.

O.K. Button - Click on this button to save the profile to the hard disk drive. A file saved message will be displayed after the operation has completed:

Note: Please verify the current directory is correct *before* saving any profiles.

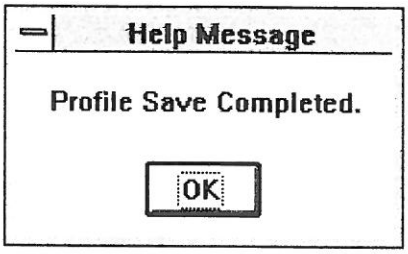

If new information is being saved to an existing file, a replace file message

will be displayed:

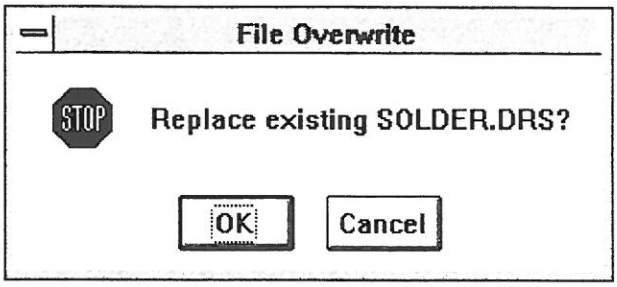

Clicking on the cancel button will terminate the **Save** option. A file NOT saved message will be displayed after the operation has

terminated:

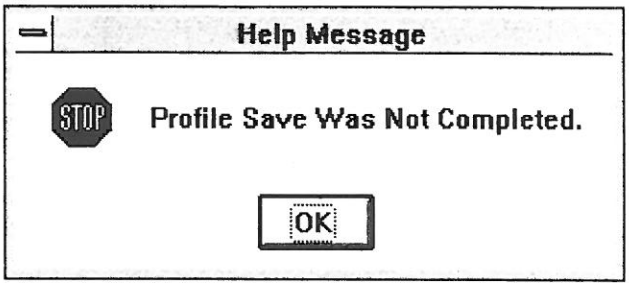

Disk Utilities

Overview - This screen provides to capability to save profiles from the hard disk drive to a floppy disk (**BACKUP**) ***or*** load profiles from a floppy disk to the hard disk drive (**RESTORE**).

Note: To avoid a computer disaster (disk crash) regular backups ***MUST*** be performed.

Backup/restore can be performed on single profile or groups of profiles. When a backup is performed the full directory path is created on the floppy disk. This can allow many different profile directories to be saved (backup) to the same disk. Access to this feature can be accomplished by selecting the **Option** menu (from the main menu) and clicking on **Backup** or **Restore**.

BACKUP

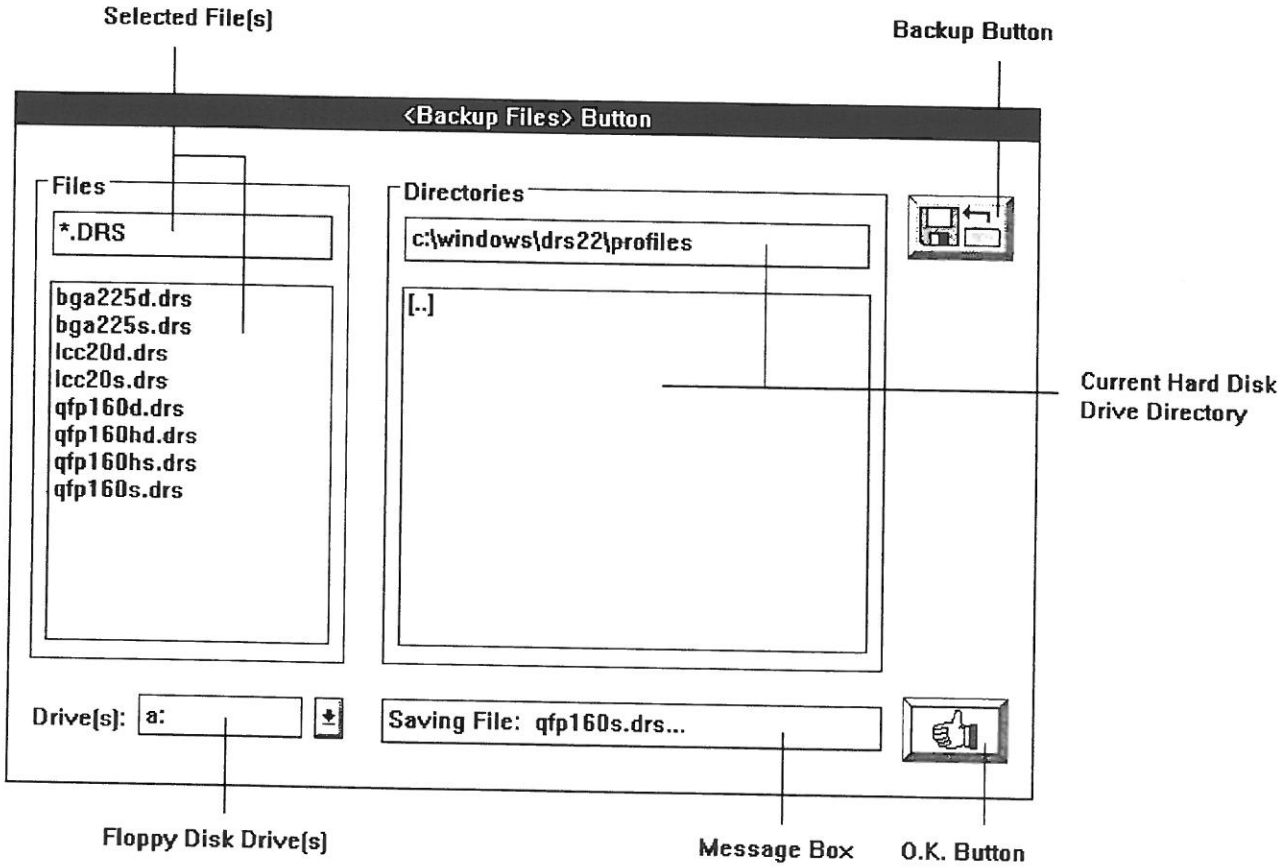

Warning: Backup will overwrite any matching directory information previously save to the floppy disk. Please be sure you are in the correct directory and have selected only those files that require a backup operation.

O.K. Button - Click on this button to return to the previous screen.

Backup Button - Click on this button to start the backup operation. The system will stop an ask if you are sure you want to do this operation.

Note: Please be careful not to confuse the backup an restore functions.

Warning: Never attempt to cancel or terminate a backup or restore operation.

File Listing - This list box show which profiles will be copied during the backup operation. Enter the profile or groups of profiles in the **File Name** edit box. If changes are made in the **File Name** edit box, press the **TAB** key to redisplay any changes in the **File Name** list box. The current directory is displayed directly above the **Directories** list box. The current directory is used to access the profile or groups of profiles entered in the **File Name** edit box.

Note: If **PBGA*.DRS** is entered into the **File Name** edit box the list box will display all the profiles that start with the letters **PBGA** and end with **.DRS**.

Directory Listing - This list box show any sub-directories that may exists. The operator can change the current directory by *double-clicking* on any entries found in this list box. The current directory is displayed directly above the **Directories** list box. The current directory is (*source drive*) used to access the profile or groups of profiles entered in the **File Name** edit box.

Floppy Disk Drive(s) - Click on this list box to select the desired backup disk drive (*destination drive*). The system defaults to the **A:** drive.

Summary

- Use the **Directory Listing** list box to select the current directory (*source drive*).
- Use the **File Name** edit box to select the profile or groups of profile. Press the **TAB** key after the entering any characters.
- Verify the floppy disk drive (*destination drive*).
- Press the **Backup** button to start the copy operation.
- The Message box will display all the file name(s) during the operation.
- Wait until the Message box displays *Backup Completed*.
- Click on the **O.K.** button to return to the **Main** menu.

RESTORE

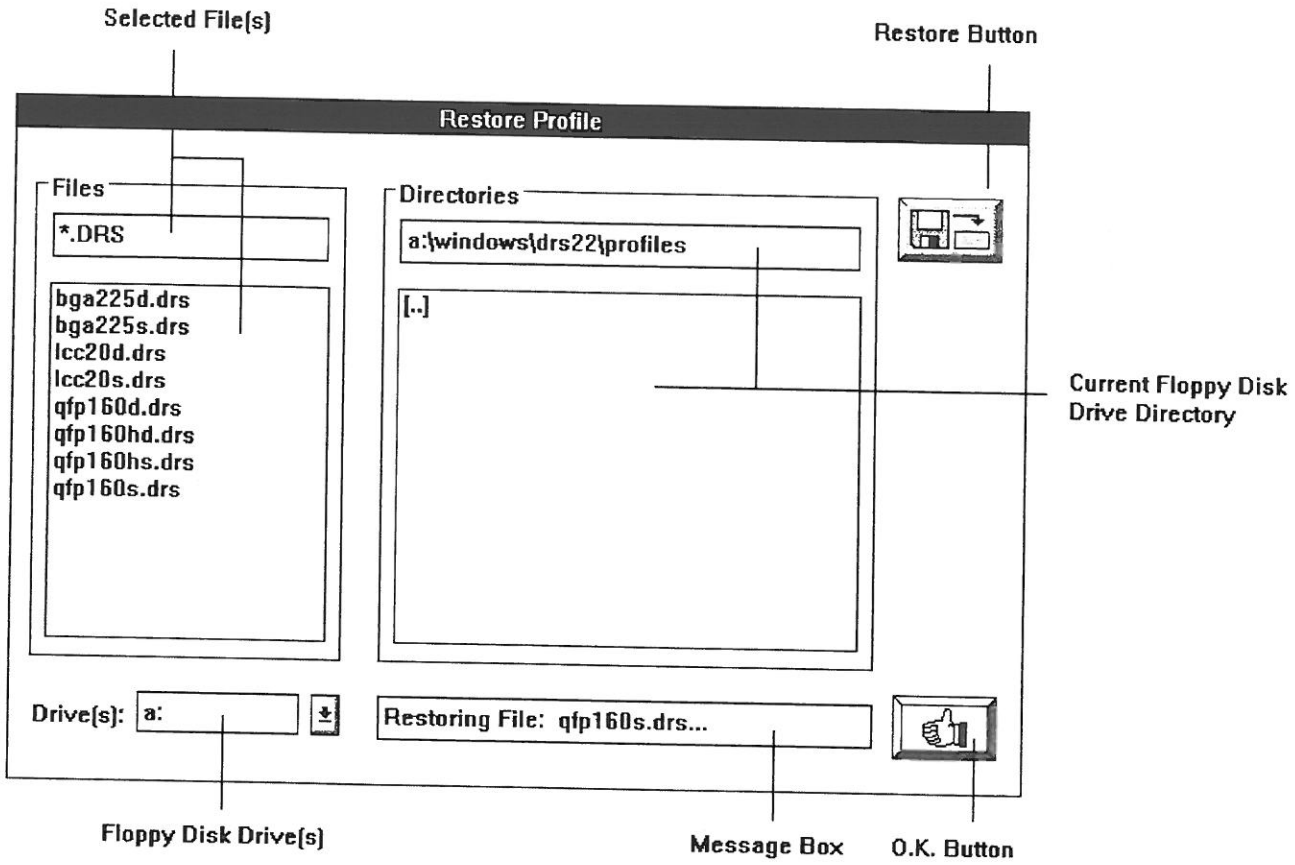

Warning: Restore will overwrite any matching directory information currently stored on the hard disk drive. Please be sure you are in the correct directory and have selected only those files that require a restore operation.

O.K. Button - Click on this button to return to the previous screen.

Restore Button - Click on this button to start the restore operation. The system will stop an ask if you are sure you want to do this operation.

Note: Please be careful not to confuse the backup an restore functions.

Warning: Never attempt to cancel or terminate a backup or restore operation.

File Listing - This list box show which profiles will be copied during the restore operation. Enter the profile or groups of profiles in the **File Name** edit box. If changes are made in the **File Name** edit box, press the **TAB** key to redisplay any changes in the **File Name** list box.

The current directory is displayed directly above the **Directories** list box. The current directory

is used to access the profile or groups of profiles entered in the **File Name** edit box.

Note: If **PBGA*.DRS** is entered into the **File Name** edit box the list box will display all the profiles that start with the letters **PBGA** and end with **.DRS**.

Directory Listing - This list box show any sub-directories that may exists. The operator can change the current directory by *double-clicking* on any entries found in this list box. The current directory is displayed directly above the **Directories** list box. The current directory is (*destination drive*) used to access the profile or groups of profiles entered in the **File Name** edit box.

Floppy Disk Drive(s) - Click on this list box to select the desired backup disk drive (*source drive*). The system defaults to the **A:** drive.

Summary

- Use the **Directory Listing** list box to select the current directory (*destination drive*).
- Use the **File Name** edit box to select the profile or groups of profile. Press the **TAB** key after the entering any characters.
- Verify the floppy disk drive (*source drive*).
- Press the **Restore** button to start the copy operation.
- The Message box will display all the file name(s) during the operation.
- Wait until the Message box displays *Restore Completed*.
- Click on the **O.K.** button to return to the **Main** menu.

Open Profile

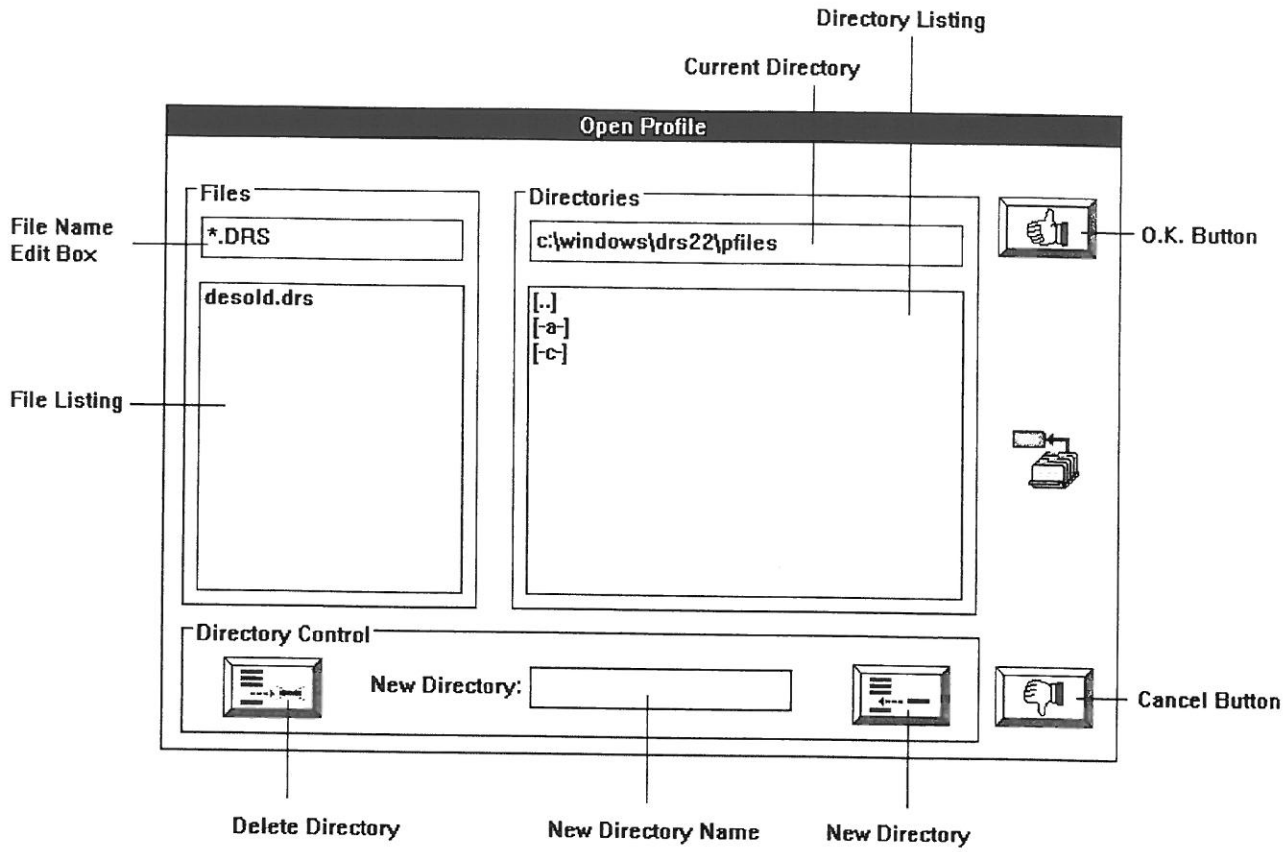

Overview - This screen allows profiles stored on the disk to be selected and then opened for application use. Access to this feature can be accomplished by selecting the **Option** menu (from the main menu) and clicking on **Open**. This option can also be used to temporarily change the current software directory (The default directory can be adjusted from the **DRS22 Setup** option). This can be accomplished by *double-clicking* in the directory listing section and selecting the desired directory. Once the desired directory has been accessed, the **O.K. or Cancel** button is selected, and all subsequent **Save** or **Save As** operations will write files to this directory.

Note: Directories can be created or deleted by using the **Delete** or **New** directory buttons.

Add Directory

- Enter an directory name in the **New Directory** edit box.
- Click on the **New Directory** button.
- Click on the **O.K.** button to return to the **Main** menu.

File Name Edit Box - Click on this edit box to enter characters from the keyboard. This name will be used by the **O.K.** button to select files into the **File Listing**.

New Directory Edit Box - Click on this edit box to enter characters from the keyboard. This name will be used by the **New Directory** button to create a *new* directory (in the current directory) and add it to the **Directory Listing**.

Current Directory - This display box is used to show the current directory. A default setting is available in the **DRS22 Setup** screen.

File Listing - This list box displays all the files that match the characters entered into the **File Name** edit box.

Directory Listing - This list box displays all the sub-directories in the current directory.

O.K. Button - Click on this button when the desired filename or directory is selected. This button uses the **File Name** edit box to select files into the **File Listing**

Cancel - Click on this button to terminate the open option. Any changes to the current directory will be saved.

Delete Directory Button - Click on this button to remove the current directory.

Warning: Be sure the current directory is the desired directory to delete. All standard files will be automatically removed. All sub-directories must be removed before the current directory can successfully be deleted.

New Directory Button - Click on this button to add a sub-directory to the current directory. This button uses the **New Directory** edit box to select files into the **Directory Listing**

Note: After the selected profile has been opened, the system will proceed to the **Detail** screen, the **Notes** screen and then to the **Run** screen.

Note: All the DRS22 system files are stored in the **c:\windows\drs22\system** directory.

Overview - Access to this feature can be accomplished by selecting the **Control** menu (from the main menu) and clicking on **Manual**. The main purpose of this screen is to provide the operator with a procedure for running simple profiles without having to teach a more complicated **Run** control profile.

There are 2 operating modes for the manual screen:

1. **DURATION=0:** The operator must enter the flow rate and temperature for the nozzle and/or the bottom heater(s). In this mode, the operator must set the duration value equal to zero. The cycle is started by pressing the footswitch. The cycle time counter (duration) will begin at zero and continue incrementing (seconds) until the footswitch is pressed a second time (terminating the cycle) or a maximum of 300 seconds is reached (terminating the cycle).

2. **DURATION>0:** The operator must enter the flow rate and temperature for the nozzle and/or the bottom heater(s). In this mode, the operator must enter a duration value greater than zero. The cycle is started by pressing the footswitch. The cycle time counter (duration) will begin at the set duration and continue decrementing (seconds) until the footswitch is pressed a second time (terminating the cycle) or the duration reaches zero (terminating the cycle).

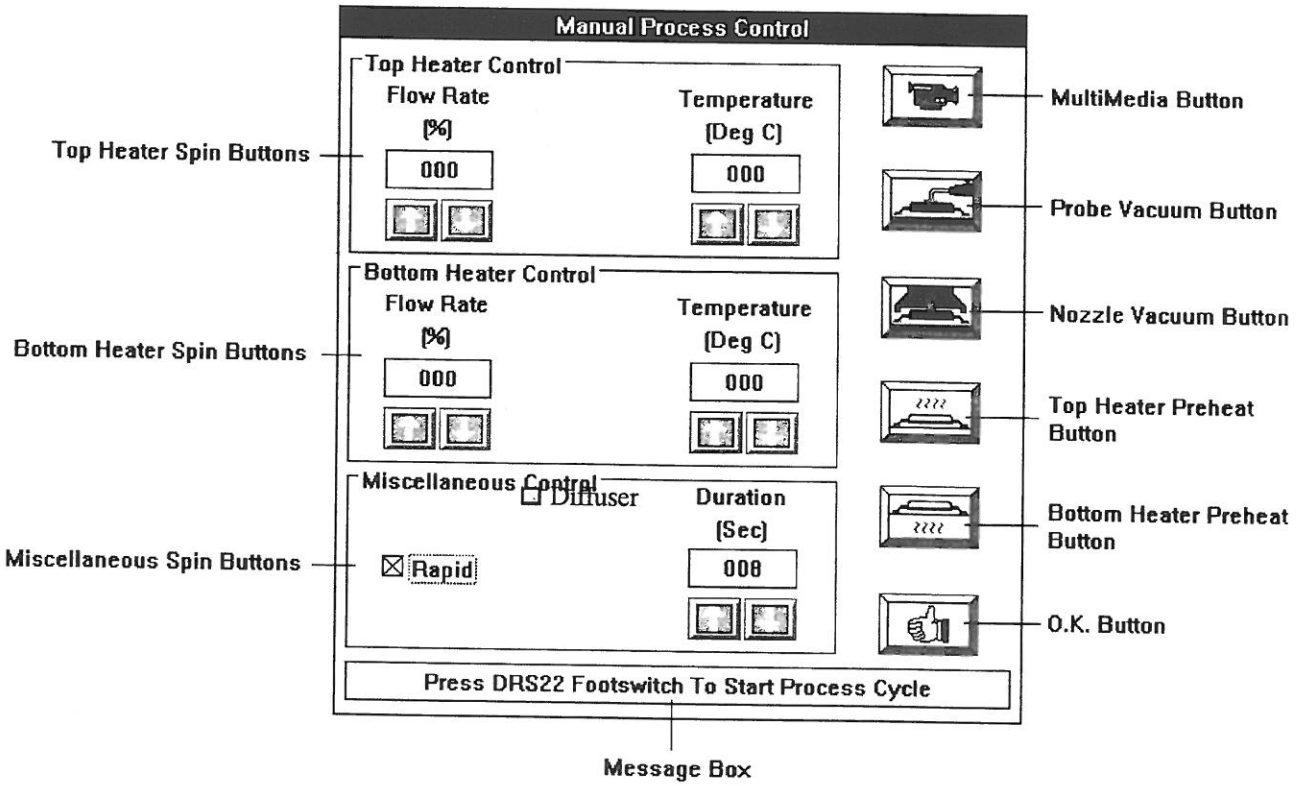

Diffuser Check Box - This check box can be used for systems that have the diffuser option

diffuser. When the check box is selected (■ = High Flow (9 scfm), ☒ = Low Flow (3 scfm)) the bottom flow rate spin buttons are disabled. The diffuser flow rate can be turned OFF by clearing the check box (□).

MultiMedia Button - This button will activate the live video option if available (see **DRS22 setup** and **MultiMedia** option).

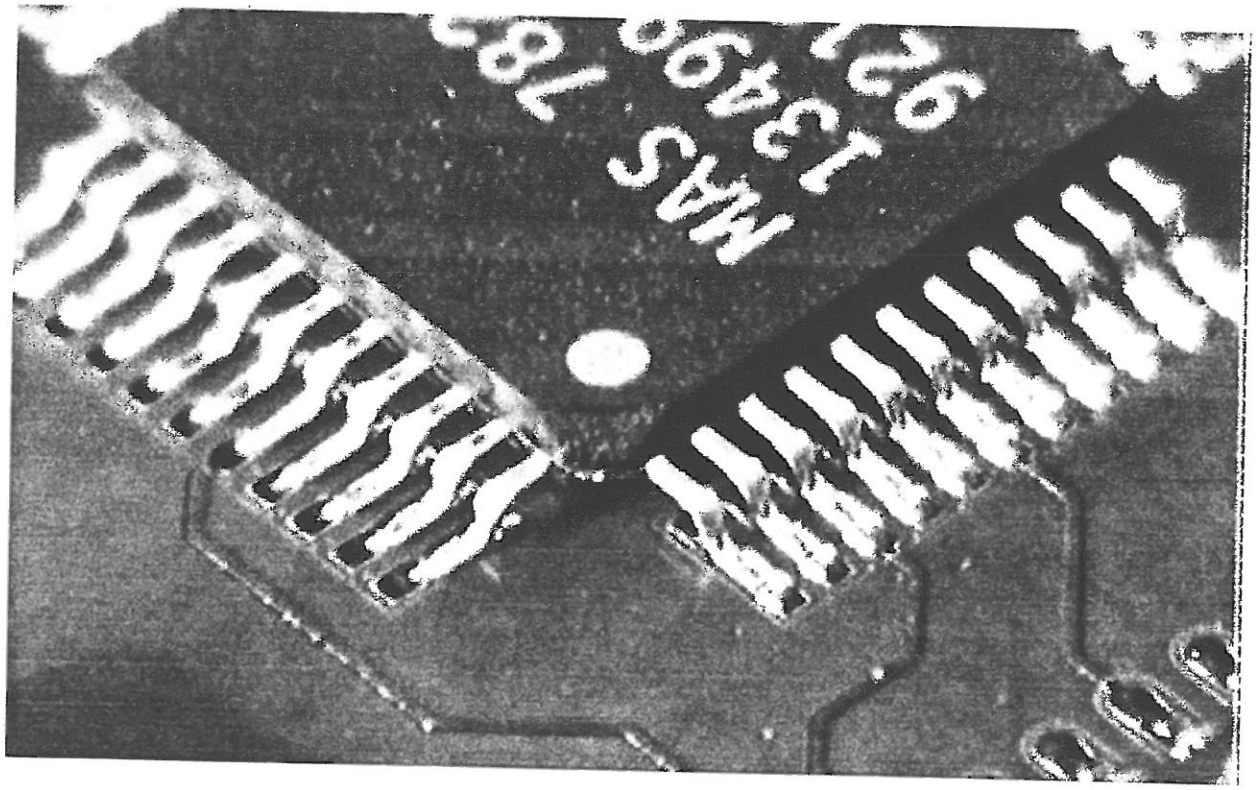

Probe Vacuum Button - This button will toggle the probe vacuum control on or off.

Nozzle Vacuum Button - This button will toggle the nozzle vacuum control on or off. Nozzle Vacuum can also be toggled on or off by pressing the nozzle vacuum footswitch (optional - not included with standard package).

Nozzle PreHeat Button - This button allows preliminary (preheat) or additional (postheat) manual heat to be applied to the process. The maximum temperature and flow rate will be selected from the existing profile events.

O.K. Button - This button will terminate any active profile cycle and return the operator to the main menu.

Duration Spin Buttons - these buttons provide the ability to set the maximum time limit for a specific event.

Message Box - This is a message display area that provides the operator with information about the ongoing process cycle.

Note: If low pressure is detected, a message will be displayed in the message box and the cycle will be terminated.

Note: The DRS22 software has a speech (voice) option. This option can be used to ***TALK*** to the operator via the Event and Alert messages. If the Speech option is activated (**DRS22 Setup** option), then all messages will be converted from text to speech through the speech synthesizer card (see **Appendix C** for hardware options or **Appendix A** for text-to-speech rules). If the speech option is not active the system will alert the operator by an audible tone.

Run

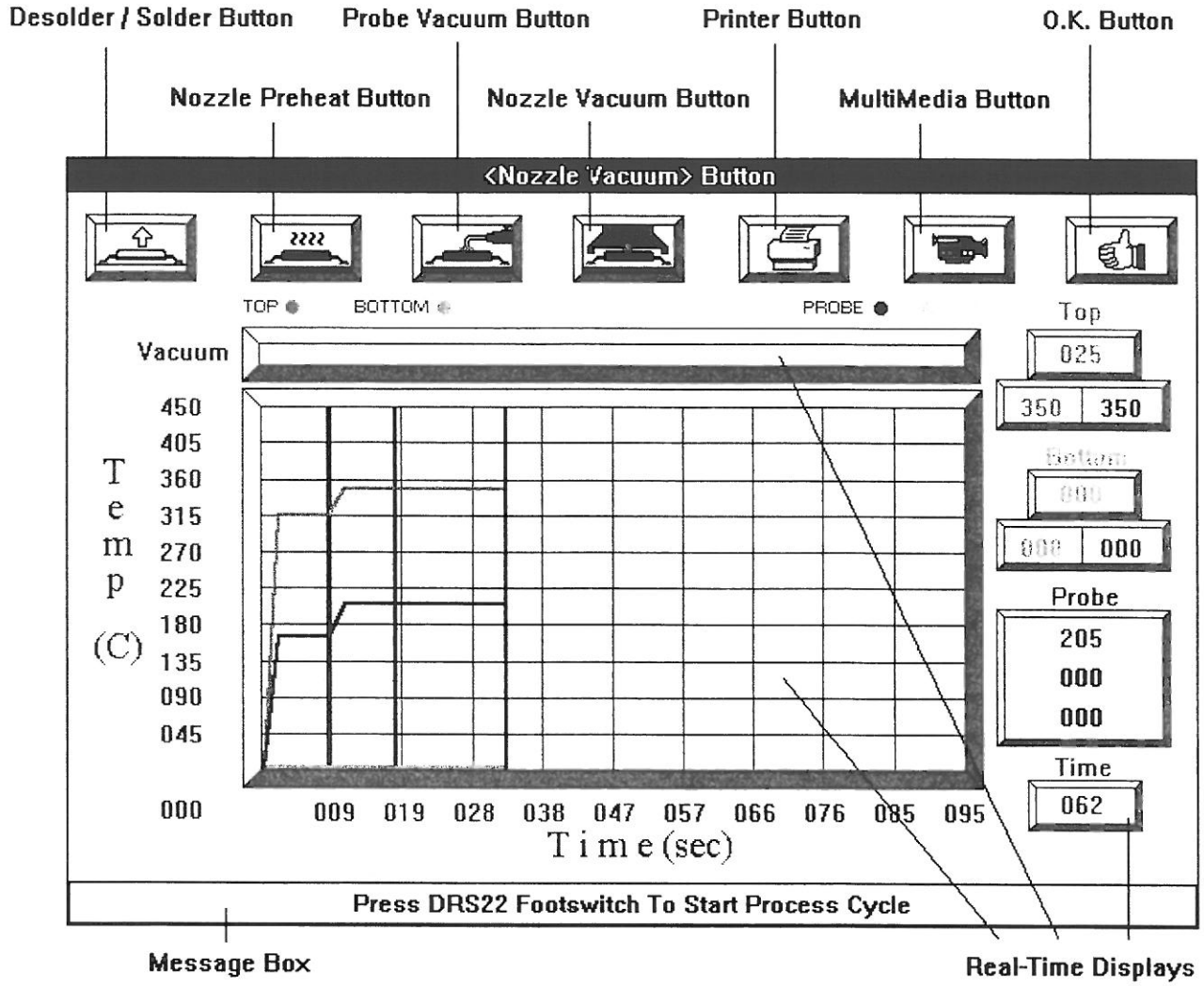

Overview - The run screen uses the currently loaded/created profile parameters to automatically monitor and control the process. The operator must press the footswitch to start the process cycle. Access to this feature can be accomplished by selecting the **Control** menu (from the main menu) and clicking on **Run**.

Note: This screen is automatically activated after selecting a profile using the **Open** option.

Desolder/Solder Button - This button provides an easy way of toggling between a solder and desolder profile. Profiles must be properly linked through the **Save** screen to utilize this fea-

ture.

Nozzle PreHeat Button - This button allows preliminary (preheat) or additional (postheat) manual heat to be applied to the process. The maximum temperature and flow rate will be selected from the existing profile events.

Probe Vacuum Button - This button will toggle the probe vacuum control on or off.

Nozzle Vacuum Button - This button will toggle the nozzle vacuum control on or off. Nozzle Vacuum can also be toggled on or off by pressing the nozzle vacuum footswitch (optional - not included with standard package).

Real-Time Displays - These areas of the screen display real-time process control information. The time box will count down (seconds) from the total duration. A temperature versus time graph will plot the control information as the cycle progresses.

- Digital Displays
  - Top Heater Flow Rate.
  - Top Heater - Set Temperature.
  - Top Heater - Actual Temperature.
  - Bottom Heater Flow Rate.
  - Bottom Heater - Set Temperature.
  - Bottom Heater - Actual Temperature.
  - Probe 1, 2, 3.
  - Time
- Nozzle Vacuum Meter.
- Message Box.
- Temperature vs. Time Graph.

MultiMedia Button - This button will activate the live video option if available (see **DRS22 setup** and **MultiMedia** option).

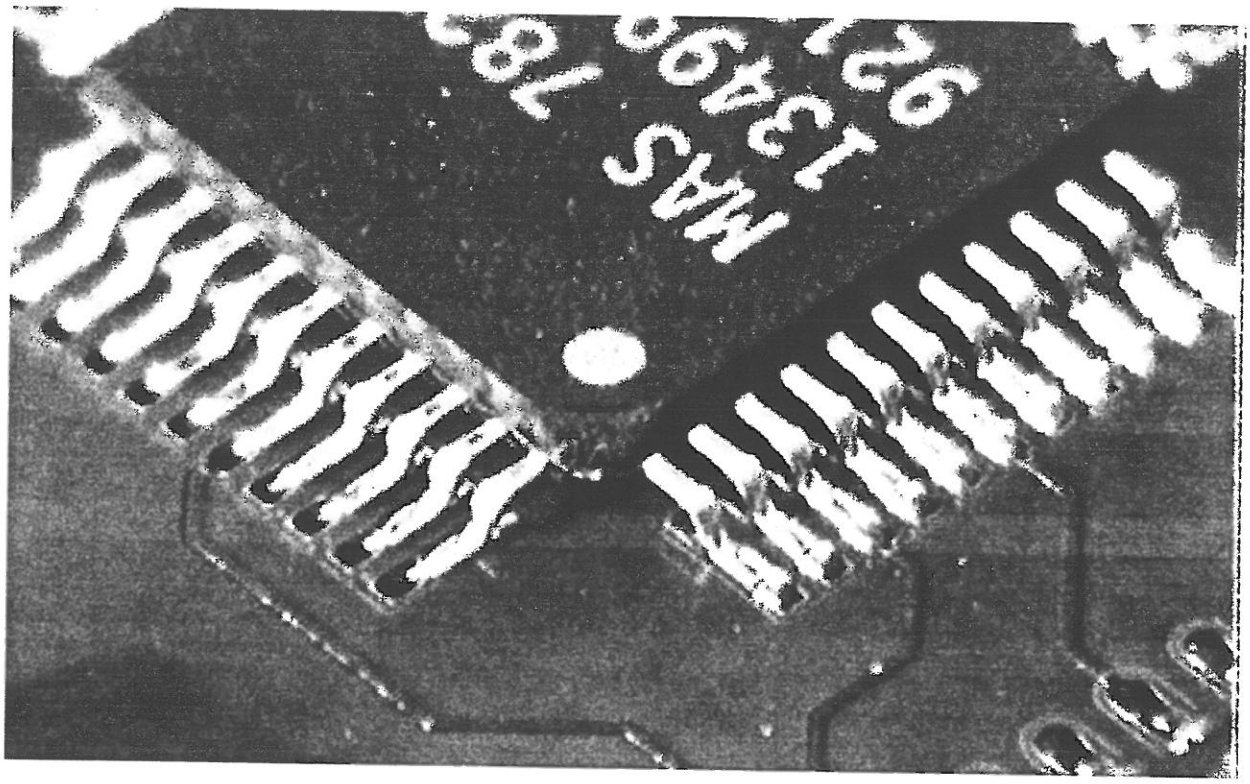

O.K. Button - This button will terminate any active profile cycle and return the operator to the main menu.

Print Button - Pressing the right trackball button activates the graph print option.

Cycle Start Footswitch - Pressing the cycle start footswitch will activate the current profile. Pressing the cycle start footswitch after a profile is active may either terminate (time-based event) the profile or skip to the next event (footswitch-based event).

Warning: If a profile is developed using a combination of time-based and footswitch-based events, accidentally pressing the footswitch during a time-based event will terminate the entire process.

Left Mouse Button - The graph data points can be individually analyzed by clicking anywhere within the temperature vs time graph. When the left mouse button is pressed, the system determines what *second* should be analyzed. The data points corresponding to the analyzed time will be displayed. The DRS22 software system records data every 3 seconds. An analyzed data point will actually be a 3 second time interval. Therefore, the starting and ending points of the analyzed data may be different. The data displayed will be either the starting or ending point of the time interval.

Right Mouse Button - Clicking on this button during a profile cycle will allow a user-defined number of seconds to be added to current event (**DRS22 Setup**). This time extension will only

be allowed once during the total profile.

Message Box - This is a message display area that provides the operator with information about the ongoing process cycle. Custom messages (see **Teach** screen) are also displayed in this area.

Note: If low pressure is detected, a message will be displayed in the message box and the cycle will be terminated.

Note: The DRS22 software has a speech (voice) option. This option can be used to ***TALK*** to the operator via the Event and Alert messages. If the Speech option is activated (**DRS22 Setup** option), then all messages will be converted from text to speech through the speech synthesizer card (see **Appendix C** for hardware options or **Appendix A** for text-to-speech rules). If the speech option is not active the system will alert the operator by an audible tone.

Export Data

Overview - This screen provides the ability to save the data points associated with a profile cycle. After a process cycle is completed, the operator has the option to save the graph data to an ascii file. The operator must enter a file name. The file name can be any acceptable DOS format (filename.extension).

Note: All export files are written to the following directory:
c:\windows\drs22\export.

Pressing the **Export** button will save the data to the file name. This information can be imported into other spreadsheet (Lotus, Excel, etc.) programs for comparisons and analysis or reloaded directly into the DRS22 software using the **Import** option.

The format of the export file is the following:

- The first line is the software version number.
- The second line is heading information.
  - Date.
  - Operator name.
  - Profile name.
- The third line is the total number of data points.
- Lines 4-xxx are the data points for all monitored information (heaters, vacuum and probes).
  These fields are numeric and are in 3 second intervals.
- Data fields.
  - Time.
  - Nozzle temperature - actual.
  - Bottom temperature - actual.
  - Probe 1 temperature.
  - Probe 2 temperature.
  - Probe 3 temperature.
  - Nozzle vacuum.
  - Event marker.
  - Nozzle rate.
  - Bottom rate.
  - Nozzle temperature - set point.
  - Bottom temperature - set point.
  - Probe 1 digital display.
  - Probe 2 digital display.
  - Probe 3 digital display.

Access to this feature can be accomplished by selecting the **Control** menu (from the main menu) and clicking on **Export** option.

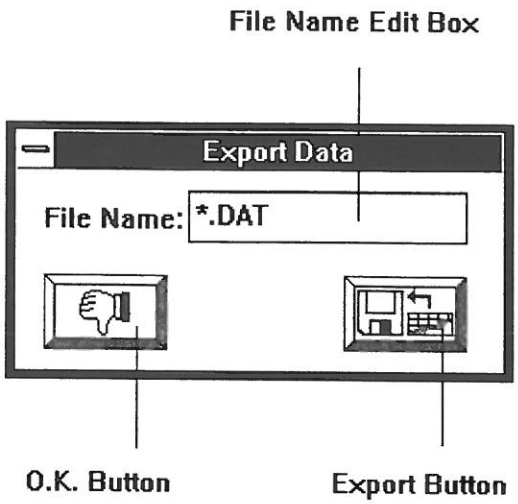

File Name Edit Box - Click on this edit box to enter characters from the keyboard. This name will be used by the **O.K.** button to save the current temperature data points.

Note: A system automatically loads a file name template. All files should end with an extension of (**.DAT**).

Cancel Button - Click on this button to return to the previous screen without saving any temperature data.

Export Button - Click on this button to save the current temperature data points to the specified file.

Import Data

Overview - This screen provides the ability to load the data points for a profile cycle that was previously saved using the **Export** option). The operator must enter the file name. Pressing the **Import** button will save the data to the file name. Access to this feature can be accomplished by selecting the **Control** menu (from the main menu) and clicking on **Import** option. This information can be imported into other spreadsheet (Lotus, Excel, etc.) programs for comparisons and analysis.

Before Import

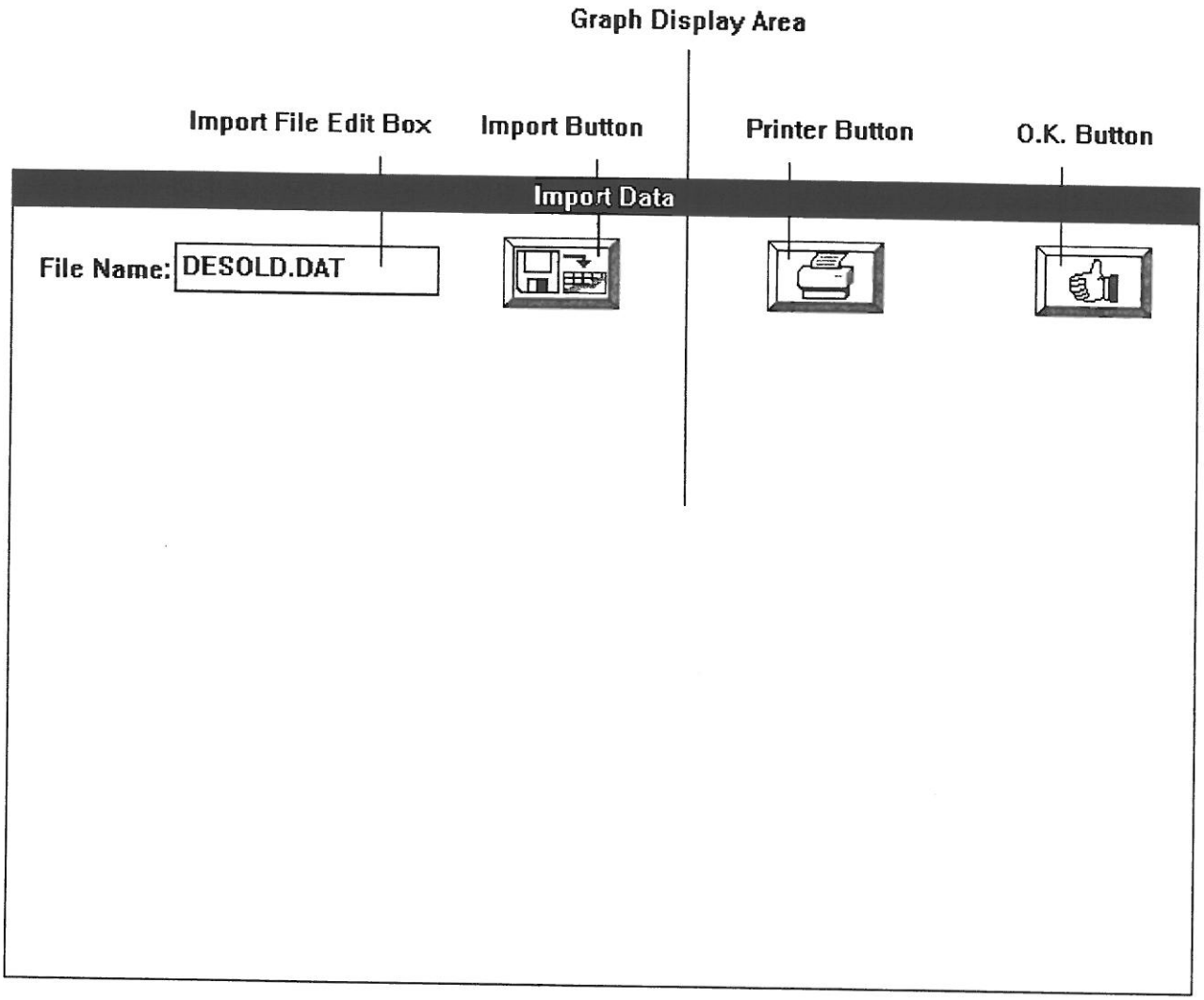

After Import

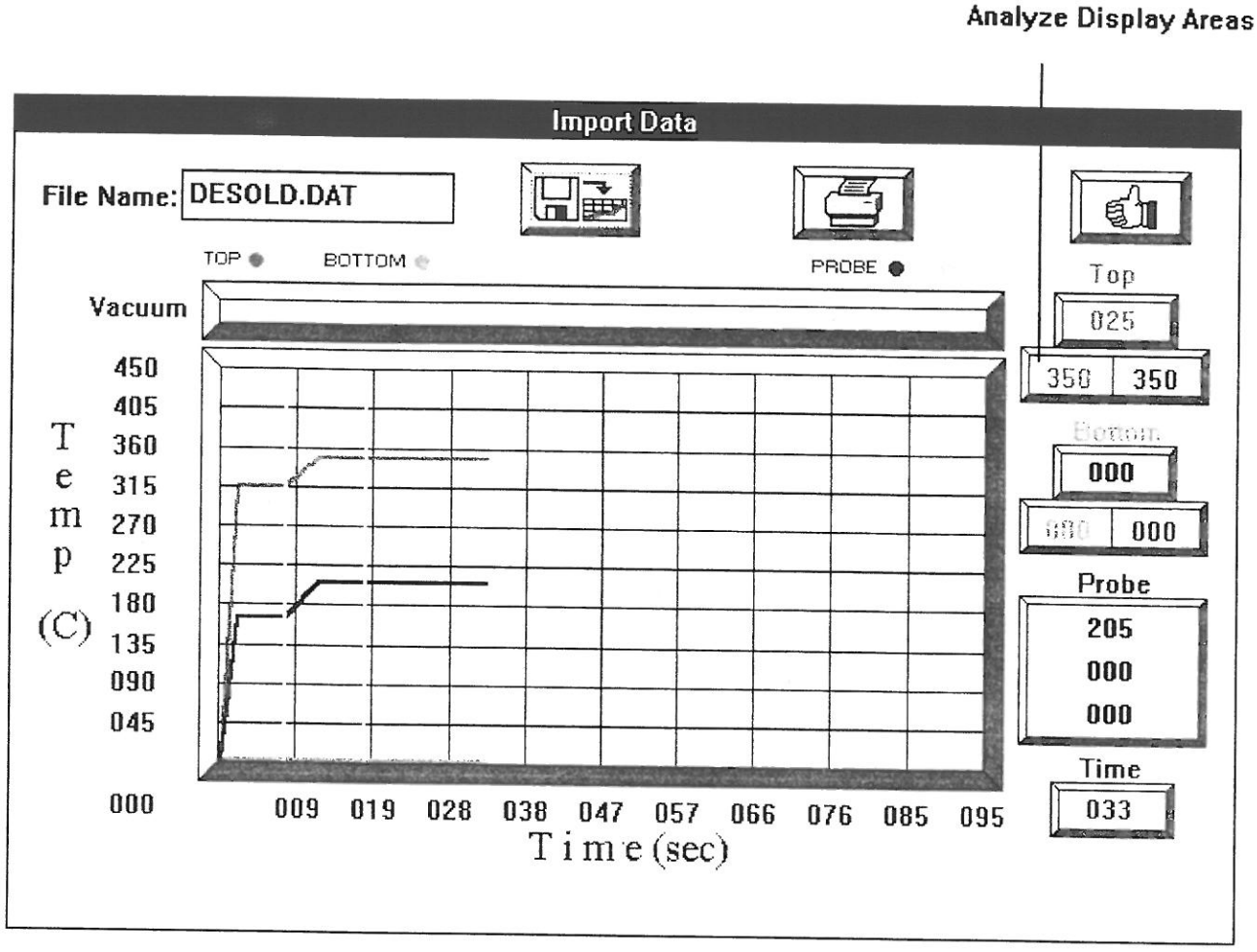

Import File Edit Box - Click on this edit box to enter characters from the keyboard. This name

will be used by the **O.K.** button to open a previously saved (using **Export**) temperature data file.

Cancel Button - Click on this button to return to the previous screen without opening a temperature data file.

Import Button - Click on this button to open a previously saved (using **Export**) temperature data file.

Left Mouse Button - The graph data points can be individually analyzed by clicking anywhere within the temperature vs time graph. When the left mouse button is pressed, the system determines what *second* should be analyzed. The data points corresponding to the analyzed time will be displayed. The DRS22 software system records data every 3 seconds. An analyzed data point will actually be a 3 second time interval. Therefore, the starting and ending points of the analyzed data may be different. The data displayed will be either the starting or ending point of the time interval.

DRS22 Setup

Overview - Access to this feature can be accomplished by selecting the **Setup** menu (from the main menu). The file that contains the following setup parameters is named **setup.drs**. This screen is used to calibrate and control the DRS22 machine.

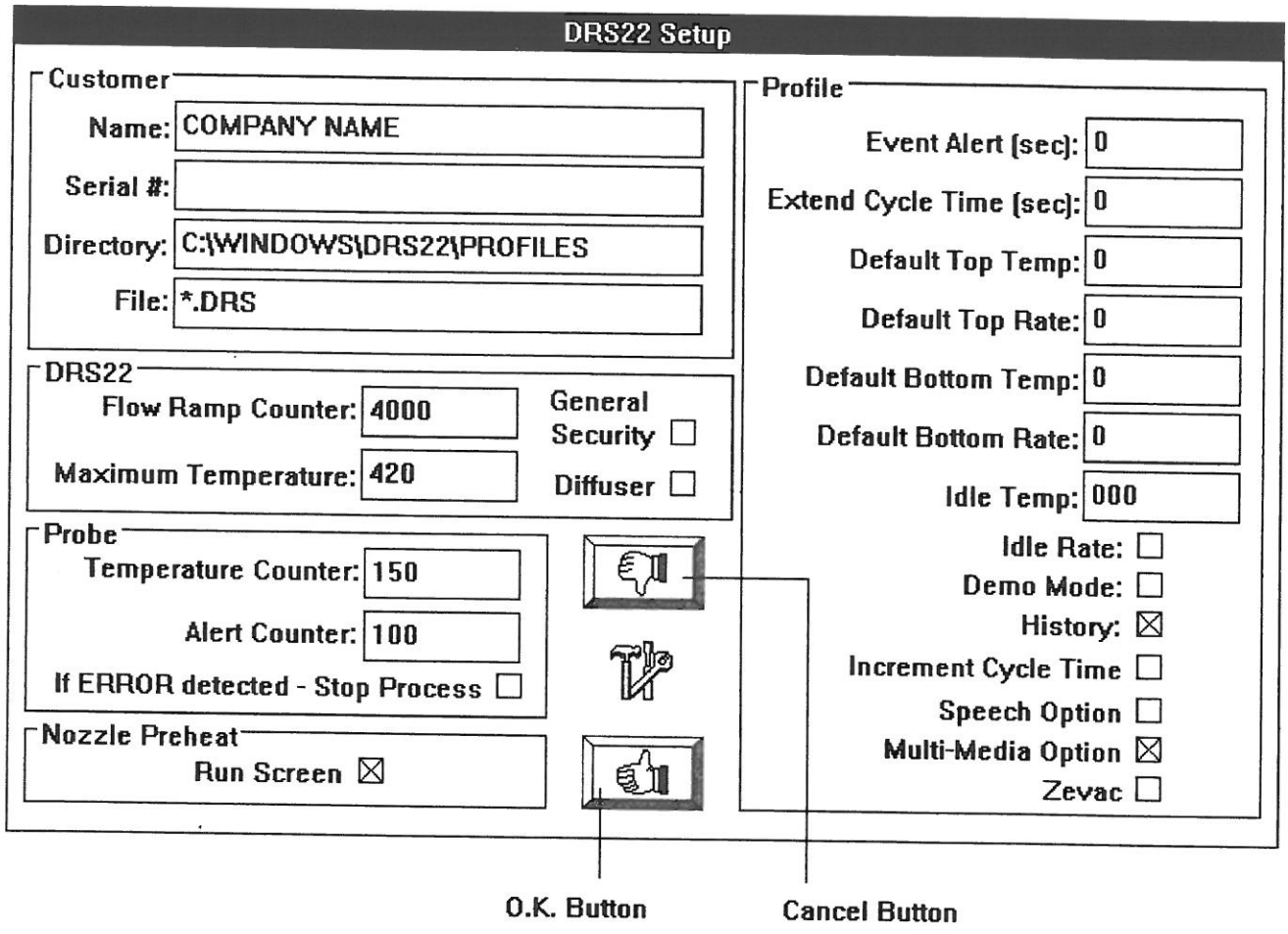

Cancel Button - Click on this button to return to the previous screen without saving any setup data.

O.K. Button - Click on this button to save the setup information to the **setup.drs** file. This file is located in the c:\windows\drs22\system directory.

Customer Parameters

- **Customer Name:** This information will be printed on all reports.

- **Serial #:** The serial number on the white control box (located on the side on the box) is very for proper machine operation. The software setup file (setup.drs) and the white control box are calibrated together at the factory. Each control box has a unique setup file.

Note: The system will not operate properly unless the serial number on the white control box matches the software serial number.

- **Directory:** This directory will be opened during the software startup phase.

- **File:** This file determines which file (or groups of files) will be displayed when the **Open** option is selected.

DRS22 Parameters

- **Flow Ramp Counter:** This parameter controls the initial activation of the nozzle and bottom heater flow rate - starting from a zero flow rate to the set point flow rate. The higher the number the slower the flow rate increase. The lower the number the faster the flow rate increase.

- **Maximum Temperature (Nozzle):** This parameter sets the maximum nozzle temperature. This value can not be changed.

Probe Parameters

- **Temperature / Alert Counter:** These two parameters control the time associated with sensing probe temperature. Normally, the system will monitor the probe temperature and when the set point temperature is reached, some action (stop process or skip to next event) will be activated. When a sample probe temperature is first detected by the system, that is equal to or greater than the probe set point temperature, a counter is incremented. This counter will continue to increment every time a sample probe temperature is equal to or higher than the probe set point temperature. The **Probe Temperature Counter** and the **Probe Alert Counter** control the length of time before a reflow action is taken or an audible alert signal is activated. The higher the number, the more time it takes for the system to recognize a probe set point. The lower the number, the less time it takes for the system to recognize a probe set point. This parameter may vary from computer to computer based on the processor speed.

- **If ERROR Detected - Stop Process:** Set this check box to ☒ if the process should be terminated when the probe set point temperature is ***not*** reached.

When an error occurs, an entry is saved to the error file - identifying the probe that caused the error. Set this check box to ☐ if the process should continue regardless of the whether the probe temperature set point is reached or not.

Nozzle Preheat Parameter

- **Run Screen:** This check box allows the Nozzle Preheat Button, located on the **Run** screen, to be enabled ☒ or disabled ☐ . Some applications have nozzle preheat included as event 1 in the profile. In cases like this, the nozzle preheat can be disabled by clearing this check box ☐ .

Profile Parameters

- **Event Alert:** Several events may be required to correctly process a complex application. The operator has the option to activate an audible alert signal at the end of each event. The Event Alert parameter controls the length of time the audible signal will be active. This parameter is measured in seconds.

- **Extend Cycle Time:** This parameter allows a profile cycle to be extended by a specific number of seconds. If a number grater than zero is entered, the cycle can be extended (at any time, during any event) by pressing the **Right Mouse** button. The cycle extension can *only* be added once per complete cycle.

- **Default Top (Bottom) Rate:** This parameter allows a default setting for nozzle (bottom) flowrate.

- **Default Top (Bottom) Temperature:** This parameter allows a default setting for the nozzle (bottom) temperature.

- **General Security:** This parameter allows any operator name to be registered. No operator validation will be performed.

- **Diffuser:** This parameter works in combination with **Idle Rate** and **Idle Temp** to control the diffuser option (DF100) (enabled ☒ ,disabled ☐).

- **Idle Temp:** This parameter works in combination with the **Idle Rate** parameter to continuously run the bottom heater air at a specific temperature. This feature is used primarily when the diffuser option is installed on the DRS22 machine (maintain temperature).

- **Idle Rate:** This parameter works in combination with the **Idle Temp** parameter to continuously run the bottom heater air at a specific flow rate.

Flow Rates: ■ = High Flow (9 scfm), ☒ = Low Flow (3 scfm), No Flow ☐ .

- **Demo Mode:** This parameter allows the system to be run without having a physical connection to the DRS22 machine. Set this parameter to a ☐ if a DRS22 machine is connected to the computer. Set this parameter to a ☒ if the DRS22 machine is not connected to the computer (demo mode).

- **History Mode:** Set this parameter to a ☒ to save a history log entry to the file **history.drs**. This file is located in the c:\windows\drs22\system directory. Setting this parameter to a ☐ will stop entries from being saved to the history log. The following fields are stored in the history file:

  1. Date.
  2. Operator name.
  3. Profile name.
  4. Actual cycle time.
  5. Maximum top heater temperature.
  6. Maximum bottom heater temperature.
  7. Maximum probe 1 temperature.
  8. Maximum probe 2 temperature.
  9. Maximum probe 3 temperature.
  10. Board / Serial#.

- **Increment Cycle Time:** Set this parameter to a ☒ if the time display located on the **Run** screen should count up from 0 (zero). Set this parameter to a ☐ if the time display located on the **Run** screen should count down from the maximum cycle time.

- **Speech Option:** Set this parameter to a ☒ if the speech (voice) option is installed in the computer. Set this parameter to a ☐ if the speech (voice) option is not installed in the computer. This option can be used to ***TALK*** to the operator via the Event and Alert messages. If the Speech option is activated (**DRS22 Setup** option), then all messages will be converted from text to speech through the speech synthesizer card (see **Appendix C** for hardware options or **Appendix A** for text-to-speech rules). If the speech option is not active the system will alert the operator by an audible tone.

- **MultiMedia Option:** Set this parameter to a ☒ if the multimedia option is installed in the computer. Set this parameter to a ☐ if the multimedia option is not installed in the computer.

Graph Setup

Overview - Access to this feature can be accomplished by selecting the **Setup** menu (from the main menu) and clicking on **GRAPH**. The file that contains the following setup parameters is named **setup.drs**. This screen is used to select the temperature plots that will be displayed on the **Run** screen.

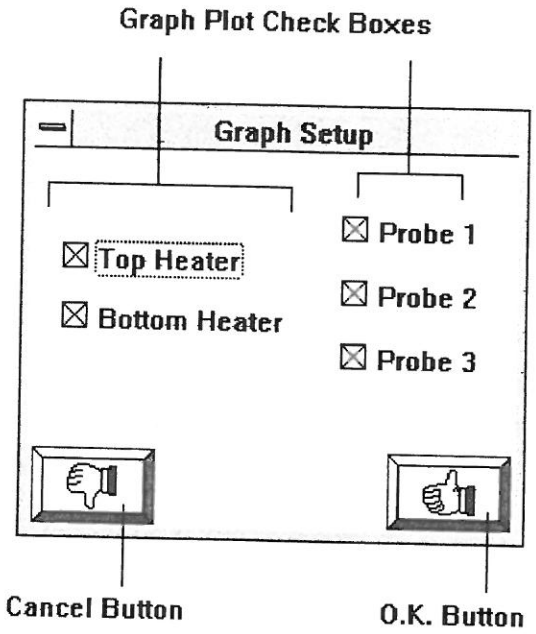

Cancel Button - Click on this button to return to the previous screen without writing/saving any setup data.

O.K. Button - Click on this button to save the setup information to the **setup.drs** file.

Note: Each thermocouple port accepts K-type sensors. These sensors can be used to monitor the temperature of the board or adjacent components. The Air-Vac HFC nozzle design provides real-time, temperature-based process control for BGA devices.

Note: These thermocouple ports do not provide isolation between the input and the output, therefore, an ungrounded thermocouple junction is suggested. Air-Vac part# for ungrounded thermocouple - TC3-08.

Speech (Voice) Introduction

Overview - Access to this feature can be accomplished by selecting the **Setup** menu (from the main menu) and clicking on **Speech Introduction**. This screen allows the speech introduction to be modified. All text entered here should follow the text-to-speech rules listed in Appendix A. Company name, Machine identification code, workstation code, operators lists, warnings messages and other text can be entered to provide important information during the software startup phase.

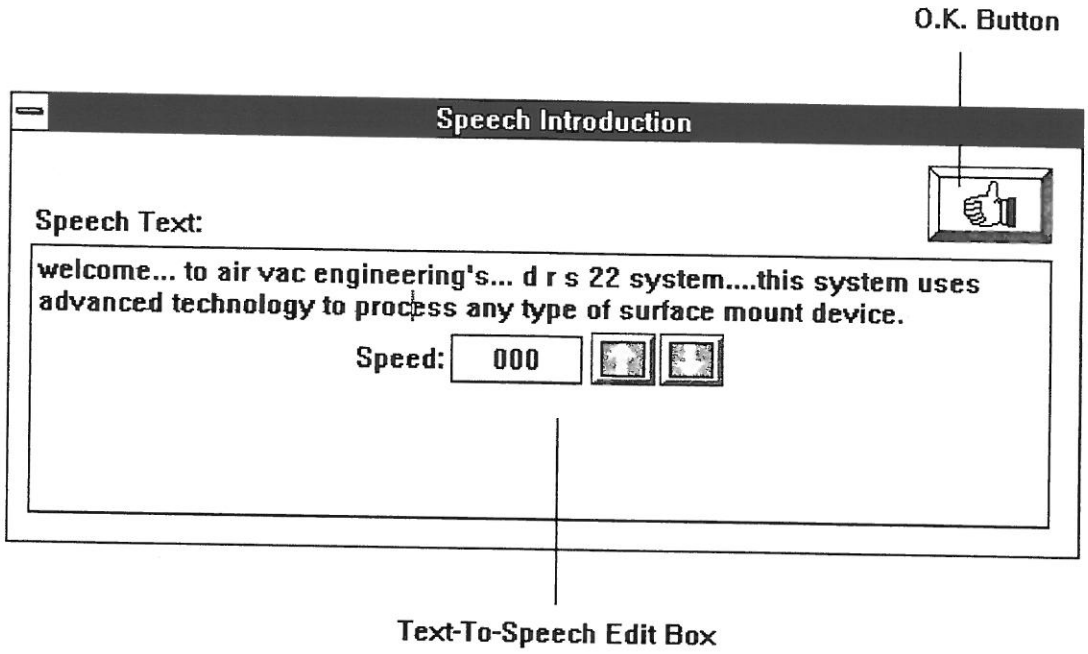

O.K. Button - Click on this button to save the speech information to the **intro.txt** file. This file is located in the c:\windows\drs22\system directory.

Speed Spin Buttons - Click on these button to change the speed of the speech card.

Delete Profile

Overview - This screen allows profiles to be deleted from the disk. To correctly delete a profile, the operator must first use the **Open** option to select a file. Access to the delete feature can be accomplished by selecting the **Option** menu (from the main menu) and clicking on **Delete**. A warning message will be displayed before the file is deleted. In addition to removing the file from the disk, a backup copy is created using the name **TRASHCAN.DRS**. This file can be retrieved and renamed if an accidental deletion occurs.

Note: The safety file (**TRASHCAN.DRS**) is only valid until the next deletion is performed.

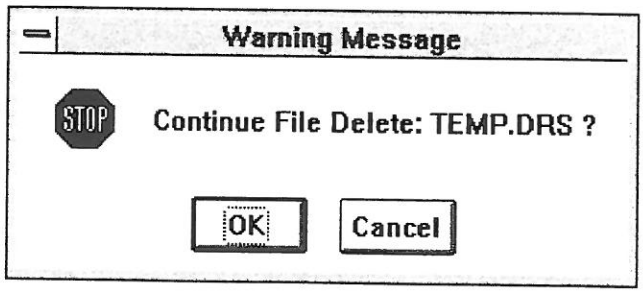

O.K Button - Click on this button to initiate the delete function. A file deleted message will be displayed after the operation has completed:

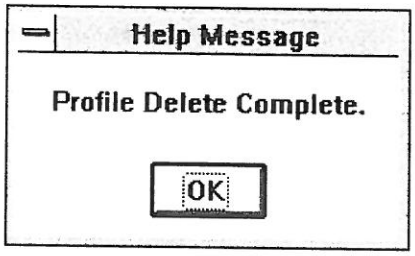

Cancel Button - Click on this button to terminate the delete function. A file **NOT** deleted message will be displayed after the operation has terminated:

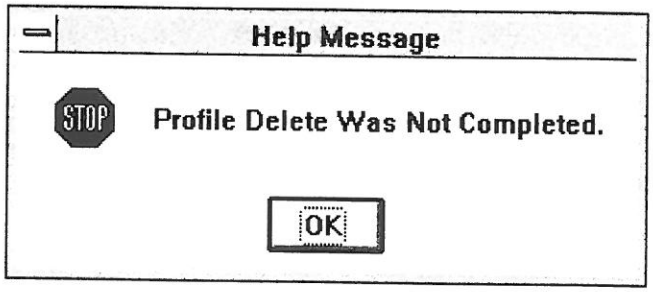

History File

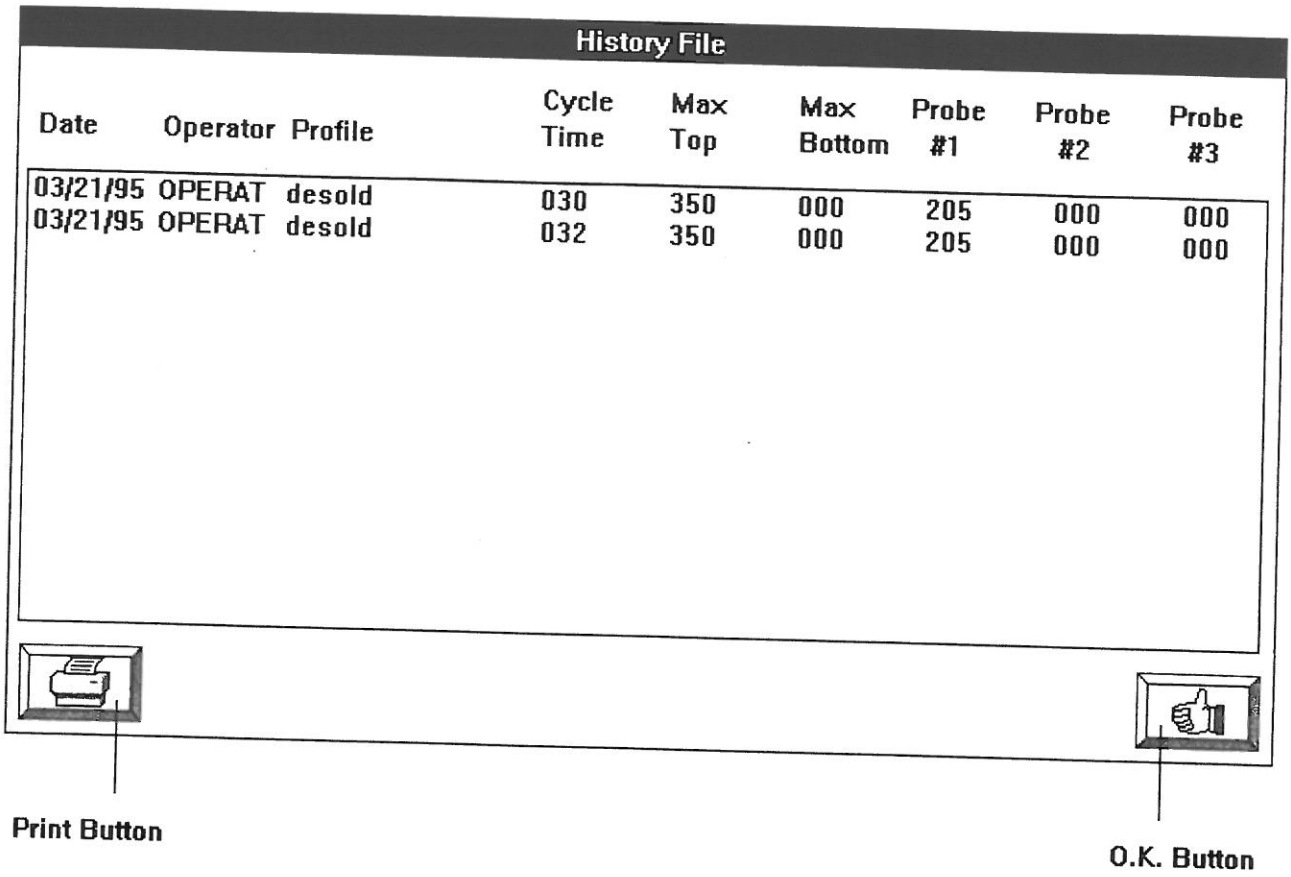

Overview - This screen is used to display operator activity. This option can be enabled or disabled from the **DRS22 Setup** option. If the history option is enabled, the system will save an entry each time the machine completes a cycle in the run mode. Access to this feature can be accomplished by selecting the **History** menu from the main menu and clicking on **Run File**.

Printer Button - Click on this button to send the complete history file to the printer.

O.K. Button - Click on this button to return to the previous screen.

Note: The history file will grow without bound. This file must be routinely printed and deleted to be sure the software system functions normally. The **Delete History** option can be accessed by selecting the **Options** menu and click on **Delete**, click on **History**, click on **Run File**.

Error File

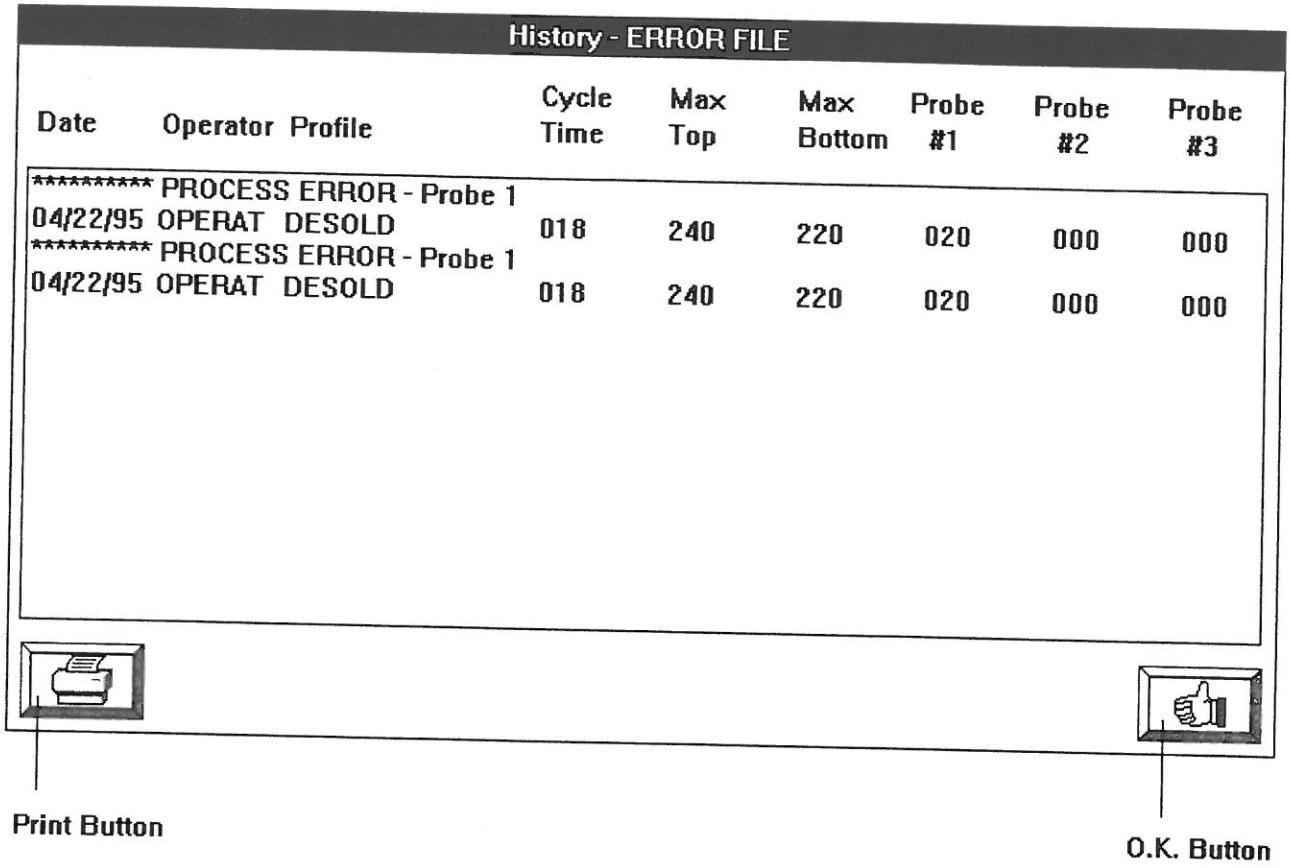

Overview - This screen is used to display probe control error activity. This option can be enabled or disabled from the **DRS22 Setup** option. If the error option is enabled, the system will save an entry each time the machine fails to reach a probe set point temperature. Access to this feature can be accomplished by selecting the **History** menu from the main menu and clicking on **Error File**.

Printer Button - Click on this button to send the complete history file to the printer.

O.K. Button - Click on this button to return to the previous screen.

Note: The error file will grow without bound. This file must be routinely printed and deleted to be sure the software system functions normally. The **Delete Error File** option can be accessed by selecting the **Options** menu and click on **Delete**, click on **History**, click on **Error File**.

About

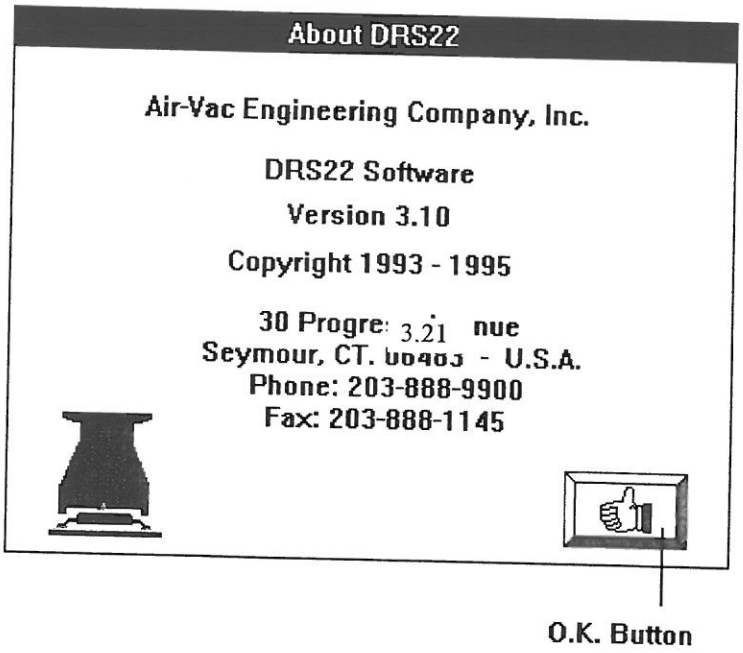

Overview - This screen is used to determine the software version currently in use by the DRS22. Access to this feature can be accomplished by selecting the **Options** menu from the main menu and clicking on **About**.

O.K. Button - Click on this button to return to the previous screen.

MultiMedia

Overview - There are several multimedia options available:

- Video - This option allows a live video source to be displayed. The video source can be NTSC or PAL type. Clicking on the **Video** menu option (or button 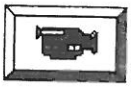) will activate the video window. Video images can be saved for use with the profile photo linking option or printed for documentation purposes.

Example 1

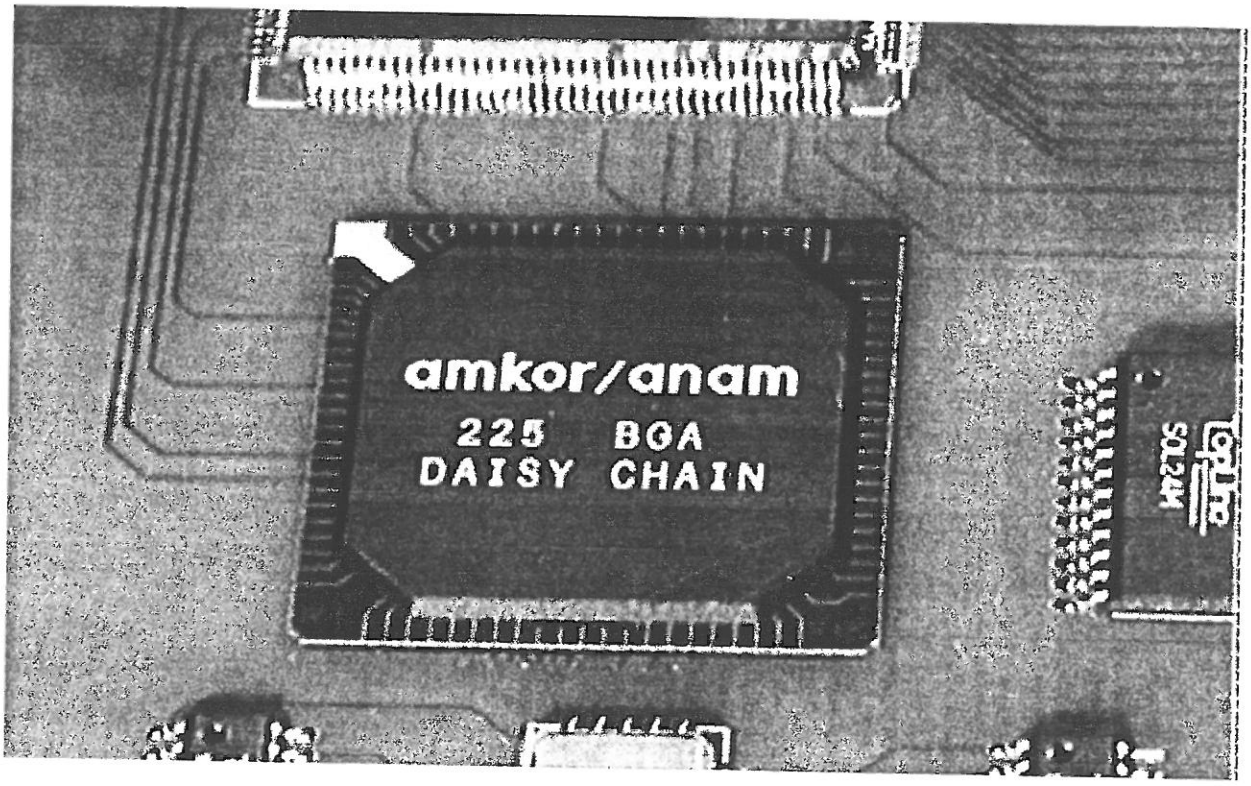

Example 2

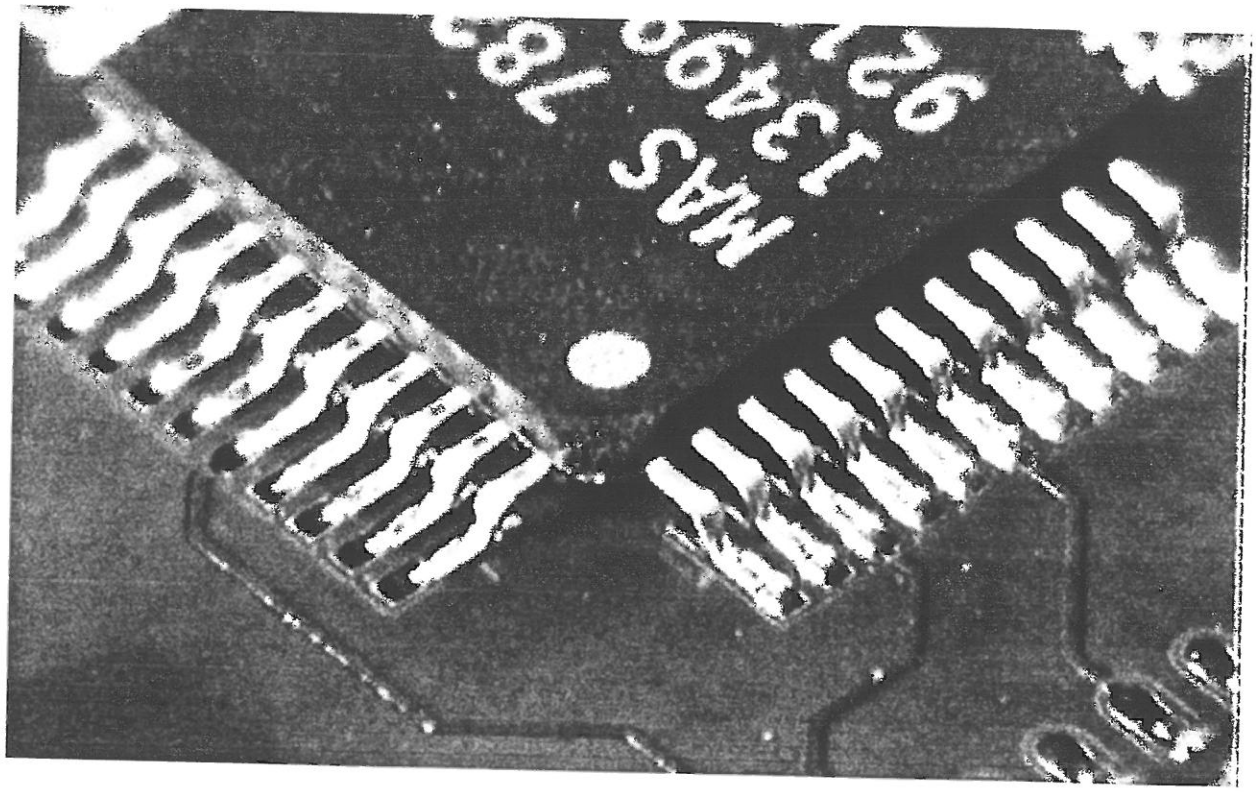

- Save - This option allows the currently displayed video image to be saved to the

disk. All photo file names must have the extension **.BMP** included as part of the name. This extension is required by the software to correctly identify video image names. Photo file will ***not*** work unless this extension is added. The format for a file name is a maximum of 8 letters or numbers followed by the **.BMP** extension.

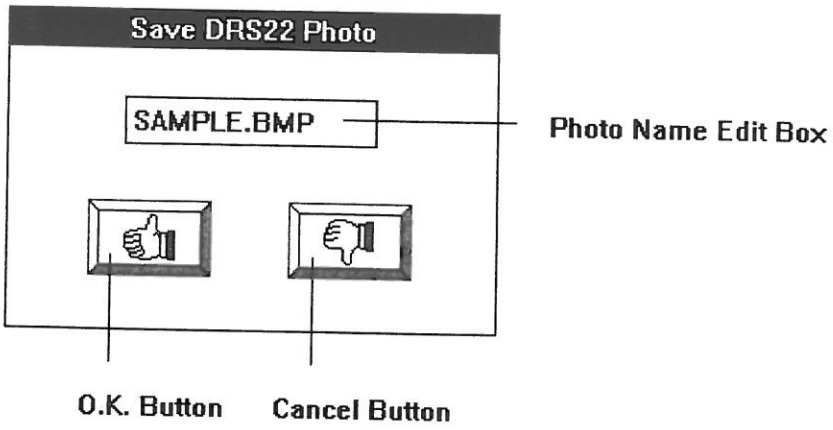

O.K. Button - Click on this button to **Save** the photo file. This file is located in the c:\windows\drs22\system directory.

Cancel Button - Click on this button to return to the previous screen without saving any information.

- Profile Photo Link - This option allows video images to be linked to application profiles. The operator has access to these video images to verify board and component accuracy (or other process related needs).

- Print - This option allows images that were previously saved to be reloaded and printed on paper. The print option uses the Windows program ***PAINTBRUSH*** to display and print the photo. This tool can be used to add text, draw lines or modify the photo for specific use in the DRS22 software.

The multimedia option is available in the following modules:

- New/Open/Edit screens.
  - Display Linked Photo.
  - Print Photo.
- Save screen.
  - Photo Linking.
- Open profile screen.

- Display Linked Photo.
- Print Photo.

- Manual screen.
  - Live Video.
  - Save Photo.
- Run screen.
  - Live Video.
  - Save Photo.

Helpful Hints

1. Nozzle Preheat - Preheating the nozzle to the operating temperature will provide a consistent starting point for each profile. Preheating allows minimal heat absorption, by the nozzle, during the initial profile startup. Generally preheating takes 30-45 seconds with the nozzle positioned at the highest location.

2. Zero temperature events - An event with zero nozzle temperature and a zero nozzle flow rate can be used to display probe temperatures after a component has been placed and soldered - this provides the ability to monitor the component temperature before raising the nozzle.

3. Nozzle Cool Down Cycle - An event with a nozzle temperature of 1 deg C and a positive flow rate can be used to cool down a nozzle.

4. Thermocouple Ports - Each thermocouple port accepts K type sensors. These ports do not provide isolation between the input and the output, therefore, an ungrounded thermocouple junction is suggested.
(Air-Vac part# for ungrounded thermocouple - TC3-08).

5. Screen Savers - This software package operates in real-time and all screen savers should be disabled or removed from Windows 3.x.

6. Profile Linking - The system provides the ability to link solder and desoldering profiles (or any 2 profiles) together. The **Save** option provides the edit boxes to allow this feature to be implemented. Linking profiles together will eliminate the operator's requirement to exit the **Run** screen before loading a related profile. The **Run** screen offers the 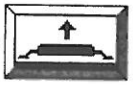 button to toggle between any 2 linked profiles.

7. If the multimedia window is re-sized and/or disappears from the operator's view, holding down the ALT key and pressing the TAB key will toggle though any open windows. Look for DRS22 - Live Video; releasing the keys will activate the window.

8. Flow Ramp Counter (**DRS22 Setup**) - this parameter controls the time that is required to activate the air flow from 0% flow rate to the set point% flow rate. This value applies to both electronic flow meters.
   - To *increase* to time, increase the **Flow Ramp Counter** parameter.
   - To *decrease* the time, decrease the **Flow Ramp Counter** parameter.

9. Diffuser Hardware Notes

- The right side control box contains the controls for the upper heater.

Note: The right side control box is similar to the standard software box with the bottom heater controls removed.

- The left side control box contains the controls for the bottom diffuser.
- The main air line connection is made to the left side control box. This connection also passes through to the right side control box.

Troubleshooting

1. Network cards of any kind ***must*** be removed from the computer. There can exist an expansion slot addressing conflict that will cause the DRS22 control card to fail. In addition, the computer that is used to control the DRS22 machine must be a dedicated system that can ***not*** be interrupted during the process cycle. The DRS22 software functions in real-time and any interruption by a network card or system can cause the application process to fail. The following list describes some problems that may occur:
   - DRS22 cycles on and off *without* operator involvement.
   - Constant low pressure warning - even when the low pressure sensors are disconnected.
   - Vacuum buttons operate correctly - rest of the system fails.

Note: Air-Vac strongly recommends that all unrelated expansion cards be removed from the computer.

2. If the high pressure lines connected to the white software control box are greater than 80 psi, the system may respond with a low pressure warning. When too much pressure is applied to the system, the vacuum solenoids will not operate (clicking sound) correctly. Reduce the pressure to 60-80 psi.

3. If the software is not installed in the correct directories (see Software Installation), the system will not operate correctly.

4. DRS22 report printing (Graphs and Profiles) requires a windows-compatible printer. Be sure the printer is connected (cable) and the windows printer drivers are installed. See **Windows** manual for details on *Installing Printer Drivers*.

5. If the Temperature Graph lines (Run Screen) are ***not*** being displayed, check the **Graph Setup** option. Graph lines can be selectively displayed and proper adjustment may be required.

6. If the software automatically cycles (and all the network cards and miscellaneous cards have been removed), check the **Demo Mode** indicator on the **DRS22 Setup** screen. The check box should be clear (☐) when connected to the DRS22.

7. If a thermocouple channel will not calibrate regardless of the calibration setting, the cable that connects the computer and the white software control box may be damaged. Use the schematic(s) to locate the wire for the thermocouple channel that is causing the problem. If the wire is broken or damaged, the cable must be replaced.

8. The **Idle Rate/Temp** controls located on the **DRS22 Setup** screen are used when a

bottom diffuser is installed on the machine. When activated, the **Idle** controller will continuously run the bottom heater. If the machine is disconnected (demo mode) from the computer and the **Idle** controllers are left activated, the system will not operate properly. The computer may lockup or fail to open profiles correctly. The machine and the computer must be connected together when the Idle controllers are activated.

Process Tips

Overview:

- A sample profile library can be found in the directory: **C:\WINDOWS\DRS22\PROFILES**.
- These profiles include step by step prompts for removal and replacement of various devices.
- The purpose of this section is to provide some techniques for improving results.

Component Removal:

1. Open the appropriate software profile for component removal. Be sure to follow all set up notes. (See **Teach** section of manual for help in how to create a profile).
2. Insert board into carrier. Use board supports as required.
3. Select the proper gas nozzle. Rotate the nozzle release ring until the clamping fingers open. Insert into upper heater assembly and rotate ring in opposite direction to close clamping fingers. Rotate the nozzle until it is square with carrier. Move carrier until component is under the gas nozzle.

Note: Use the **GNT** handling tools to hold ***HOT*** nozzles.

4. Looking through the microscope or camera, use the theta adjustment knob to rotate the nozzle until the bottom edge is parallel to the component body.
5. Lower the gas nozzle using the Z axis knob. View through microscope or camera and adjust X fine adjustment knob to position SMD in nozzle pilots until SMD is centered. The distance from the left and right side of the SMD to the outside edge of the nozzle should be the same. Using the Y fine adjustment knob. finalize the SMD position in the nozzle pilots. Lock carrier. Raise nozzle slowly approximately 3 - 4 inches above the device. The nozzle should move freely away without interference or stress to the SMD.
6. Apply flux to solder joints using syringe while viewing through microscope. Preheat the nozzle to the desired set point in the raised position to assure repeatable cycle times.

7. Lower nozzle and begin the reflow cycle. The software profile will automatically control gas temperature, flow rate and time parameters. The nozzle vacuum can also be automatically activated at the end of the cycle at which time the operator slowly raises the nozzle to remove the device.

Note: The operator should visually verify that full reflow has occurred by viewing the solder joints during the process through the microscope or camera. If for some reason full reflow has not occurred, the operator can extend the process cycle by depressing the right side mouse button. The length of this extension cycle is programmable through the setup screen.

8. Place the component tray under the nozzle and stop vacuum.

9. Removal process complete.

Note: Some or all of the described steps are programmable through the software. These notes are intended to provide an overview of a typical removal process.

Pad Preparation

- Before a component replacement process begins, the pads must be prepared. Typical factors which impact the condition of the pads after component removal include:

  1. Type of flux used.
  2. Compressed air or nitrogen as heat source
  3. Type of device/volume of solder on pads
  4. Quality of removal technique

- An active flux such as water soluble or RMA will typically result in more uniform pads with less icicling. No clean fluxes typically result in less uniform pads with a higher degree of icicling. If no clean flux is a requirement. Air-Vac strongly recommends the use of nitrogen. In general, nitrogen will not only improve pad quality but will also improve solder joint appearance and quality (i.e. cleaner. more shiny joints).

- Also, the relatively low volume of solder of fine pitch QFP pads typically will necessitate more site prep then non-fine pitch pads with heavier solder volume.

- Some typical methods for redressing pads include:

  1. Reapplication of flux followed by a touch up process using a chisel point soldering iron with a small volume of solder on the tip.

2. Reapplication of flux followed by a hot air heating process using the gas nozzle to reflow the pads and remove icicles.

3. Total removal of solder using solder wick followed by a reapplication of fresh solder paste using a micro stencil system.

Component Alignment and Replacement Process

1. Open the appropriate software profile for component replacement and follow all set up notes.

2. Fine pitch QFP's should be fed into the nozzle directly from packaging trays to eliminate handling damage. BGA devices should be fed into the nozzle using the BGA insertion tool. It is advisable to use pre-tinned replacement devices.

3. Once the device is located in the nozzle, activate the vacuum and lift nozzle to its highest position.

4. Release microscope adjustment button and push microscope to its highest position. Grasp vision housing handle and pull vision optics forward to ***STOP*** position. This ***STOP*** position is not critical for alignment. Fiber optic lamps will automatically illuminate. Rotate blue microscope focusing ring or camera focus ring until board is clearly in focus. Rotate polarizing filter, if necessary, to compensate for PCB contrast.

5. While viewing through microscope or camera, lower nozzle until red LED comes on in center of image. Slowly back off until red LED just disappears. Both the PCB and SMD images are now in focus. Inspect quality of SMD leads.

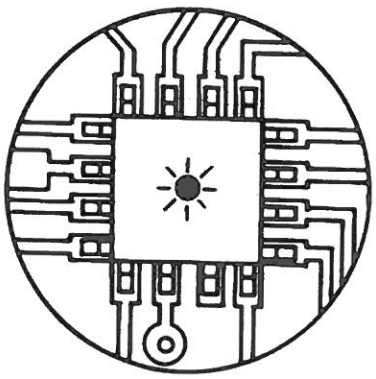

6. Tilt microscope or camera until the component is in center of field of view. Use X and Y fine adjustment knobs to match SMD leads to PCB footprints. Adjust contrast of board, if necessary, with polarizing filter. Theta rotation can be accomplished by turning nozzle/heater theta adjustment knob. When using theta adjustment, compensate for half the rotation needed, then finalize by readjusting X and Y fine adjustments. See figure A & B.

A. The first view shows the leads positioned on the pads, but slightly off in the Theta positioning.

Note: It is important to note that the gap on the pads is the opposite of the gap on the bottom of the pads. This is an indication that the Theta position is off.

B. The second view shows the correct position of the leads on the pads where there is equal spacing around the lead. Be sure to view the top leads with the bottom, as well as the left to the right.

7. Push vision system back into housing. Fiber optic lamps will automatically shut off. Using the microscope or camera, lower nozzle with vertical movement knob until leads are approximately 1 mm above PCB.

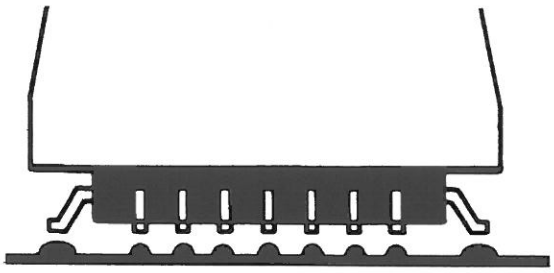

Warning: Be careful not to bend SMD leads on the solder bumps. Press footswitch to activate gas flow. Once the PCB pads are molten, place the SMD onto the footprints. Turn off the nozzle vacuum; discontinue gas flow; and allow joints to solidify. Raise the gas nozzle and inspect joints.

Note: Once a BGA device is aligned, lower the HFC nozzle until it makes light contact with the board. The nozzle must seal against the board to achieve desired results.

Note: Some or all of the described steps are programmable through the software. These notes are intended to provide an overview of a typical alignment and replacement process.

Additional Process Notes

1. It is advisable to use pre-tinned replacement components. A pre-tinned SMD with a solder melting point above the process solder melting point, should be considered.

2. Rotation of the nozzle to shear the epoxy bonded SMD's can lead to problems. Many PCB's are so dense that rotation is not physically possible. The downward pressure of the nozzle on the SMD and the release of this force with rotational movement, may cause the pad of the adjacent footprint to shear off the PCB. Use a fine, curved tweezer to pop the SMD into the nozzle vacuum.

3. For production soldering, a simple fixture can be constructed to load and unload boards. An aluminum plate with piloting pins can be utilized to locate each board quickly. Solder is then applied to the board. A component is located within nozzle pilots, placed, and reflowed.

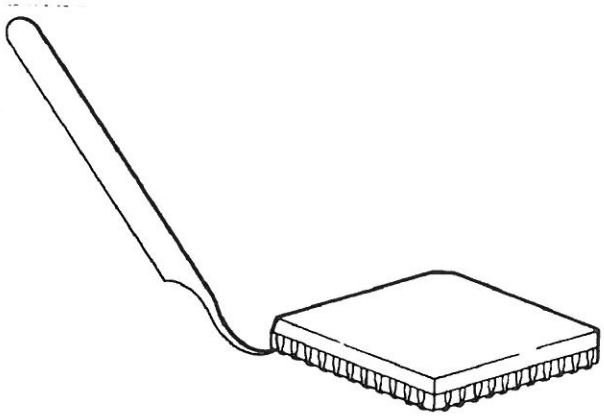

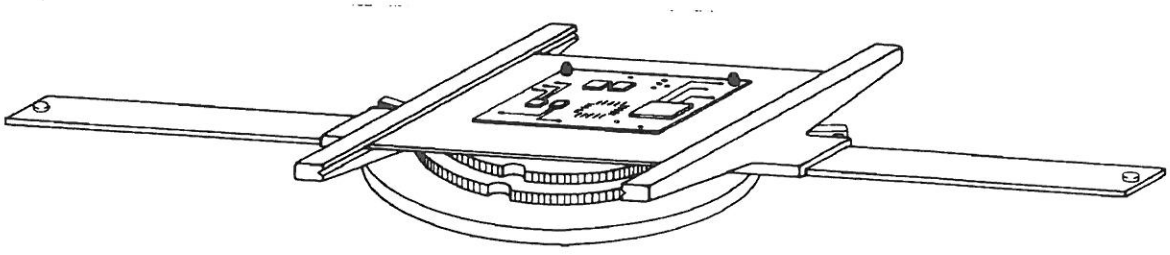

4. There are a number of methods to rework assemblies with conformal coatings. It is recommended that you contact the manufacturer for the process best suited for your application. The first method is to remove the coating using a solvent. The second method depends on the type (temp.) of conformal coating used. As long as the coating is below the melting point of the gas, remove component with conformal coating on leads. In either case, the remaining solder on the pads must be removed using a desoldering tool or solder wick. Once the pads are clean, insert the new component into the nozzle, apply solder, place component, and reflow.

5. When working with ceramic packages (VLSI) with gull-wing type leads, use a 100% flow rate. The extra heat is needed to overcome the heat sink characteristics of the ceramic material and allow sufficient heat to the solder joints.

6. Flux should be used in the operating process to enhance solderability. A third application of flux over the SMD leads will assist in proper solder wetting if wicking was inadequate after the second application.

7. To help prolong solder life, it is advisable to use nitrogen or another inert gas through the upper heater system. A separate input at the back of the module is provided. Nitrogen prevents the solder from oxidizing, giving the existing solder on the board a greater possibility of being reused.

8. For board support on the underside of very large PCB's, rubber standoffs can be mounted to the carrier rail. In addition, a magnetic base can be utilized for added adjustability. Contact Air-Vac for more information.

Temperature / Gas Flow Guidelines

- To remove or solder a surface mount device, sufficient heat must be applied to melt the solder at all the joints. The amount of heat to the joints should be rapid as not to affect the die or internal circuitry of the component; yet uniform and gradual as not to cause thermal shock. This gradual, uniform heat will allow the operator greater control, resulting in optimum solderability. The flow of heat should be directed as to minimize the affect to the device and the balance of the assembly.

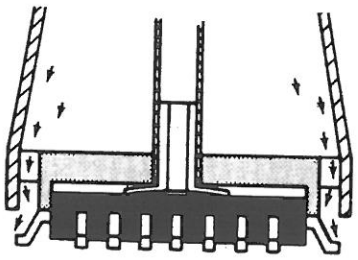

- The DRS system uses hot air or gas as the medium to transfer this heat. The heat output can be expressed as the gas temperature times the rate of the air flow over the period of time. The ability to transfer heat (heat transfer coefficient) increases as the flow increases. To minimize heat to the assembly, it is beneficial to increase the flow of air rather than the temperature setting. In most cases, the temperature should be set at 285°C. Variations will depend on the board and component characteristics, including adjacent component spacings.

DRS P.M. CHECKLIST

A. Heater Head and Vertical -- Remove upper covers

____ 1. Check for wobble in nozzle cone.
____ 2. Check nozzle clamp: opens completely and holds, snaps closed by itself.
____ 3. Run wire brush through vacuum tube.
____ 4. Check for airtube cracks at heater heat cap and insulation on wires inside.
____ 5. Check for tie wraps: Tube input, to hold vacuum hose; around hose and tube through vertical supports.
____ 6. Clean lead screw vertical shafts and regrease.
____ 7. Clean friction drive with alcohol and Q-tip (DRS26).
____ 8. Check for ease of movement of head trolley and bearing.

B. Table

____ 1. Check for play in 'Y' bearing.
____ 2. Check for play in 'X' bearing.
____ 3. Place glass plate in arms.
- ____ a) are arms parallel?
- ____ b) check with knife blade in 'X' and 'Y' -- must be within 0.004" at either end.
- ____ c) check board support -- should be 0.920" for DRS26; 0.634" for DRS22.
- ____ d) check clearance between diffuser and glass -- should be +/- 0.010".

C. Calibration

____ 1. Diffuser set to PSI_____.
____ 2. Diffuser low flow at 3.0 scfm.
____ 3. Controller takes commands and heat activates at low flow.
____ 4. Temperature stabilizes at:
- ____ a) 300 degree C low flow.
- ____ b) 420 degree C high flow.

____ 5. Do nozzle flow calibration.
____ 6. Do nozzle heater calibration.
____ 7. Check thermocouple calibration ranges: 60 - 240 degree C.
____ 8. Check Nozzle Vacuum 20" HG.

D. Optics

____ 1. Clean all optics:
- ____ eye pieces
- ____ focus lens
- ____ primary mirror
- ____ prism
- ____ polarization filter

____ 2. Check vision alignment and sensor height.
____ 3. Rotate polarization filter pads -- should move less than 1/2 a pad on a 20 mil part

E. DRS26

____ 1. Lock table, go to manual screen.
- ____ a) does Force = zero?
- ____ b) does it return to zero without sticking?

____ 2. Reset cycle counter
____ 3. Delete History and Error files.
____ 4. Power down machine and computer for 5 minutes, then power up.

Maintenance

Preventative Maintenance Schedule

Daily:

- Clean carrier area of fallen parts
- Wipe painted surfaces with cleaner
- Clean nozzles with flux remover and soft brush--replace vacuum cup if required
- Report any problem to supervisor

Weekly:

- Clean microscope and vision system optics with lens cleaner kit (22.00.296)
- Wipe flux from table, arms and rails--apply film of lubricant
- Apply silicone spray on bearing rails and dove tail rails

Monthly:

- Grease vertical movement, bearing rails, and "Y" axis shafts with toolmaker's grease
- Check vacuum filter--replace if necessary
- Check vacuum at nozzle. If not at least 20" Hg vacuum force, clean or replace muffler, replace vacuum tube, clean vacuum pump.
- Adjust vertical movement tension screw if necessary
- Check air supply filter

Bi-Yearly:

1. Check lights and operation
2. Software calibration
3. Vision calibration
4. Grease microscope focus tube with microscope tube "Wild Leitz" MS3-126277
5. Apply anti-seize to clamping fingers
6. Check carrier stiffness
7. Clean heating element vacuum tube

Warning: • Filtered, dry, regulated air must be provided

• Electrical input MUST be 220 volts +/- 10%, 50-60 Hz

Process Preventative Maintenance

- Supply clean compressed air or nitrogen. Do not allow the lines to be changed by unauthorized personnel.

Warning:

- Unfiltered air can result in the following problems: premature heater failure, contaminated flow meter, vacuum pump, and moisture exhaust in electrical compartment.
- Unregulated air will shut off solenoid (too high) pressure or will not allow heater to activate (too low).
- Air requirement: 60-80 PSI, 12 scfm (6 scfm for heater, 6 scfm for venturi pump) clean dry compressed air or inert gas + 8scfm for Diffuser.

- Change the nozzle with the GNT3 Theta Rotation Tool or proper pliers. DO NOT GRAB at the bottom of the nozzle as it will damage the gas nozzle opening.
- Store nozzles in tray. Do not drop nozzles.
- Do not force the SMD into nozzle. Damage will occur to the nozzle nest, PCB or component. The vertical movement should be smooth when the component is in the pilots.
- Do not apply excessive flux. Consider fume extraction system.
- Remove the arrows from repair components. They stick to the inside of the nozzle.
- Do not clean nozzle in cleaning solution or degreaser with vacuum cup still installed
- Do not run the process without a vacuum cup. Change cups after long exposure to heat and flux.
- Transport the unit holding the base. Do not lift unit by the board carrier or

microscope.

Adjustment Of LED Sensors

- To assure the correct position of the PCB and SMD, an electric eye is incorporated. A light beam is triggered, activating a red LED which shows up in the view of the microscope. At this level, both the PCB and the SMD are in focus. Raise the Z axis slightly to eliminate the red LED from the field of view during alignment.

- If the LED sensors are properly positioned, the leads and pads should appear to be in the same viewing plane once the sensor is tripped. If it appears that the component leads are either above or below the pads (i.e. not in same plane), the LED sensors can be adjusted.

- To adjust the sensors, loosen the two screws on the outside of each sensor and slide the sensor up or down until the red LED flickers *off* - when the leads and pads are in the same plane.

- Re-tighten sensor screws.

- Both sensors should be moved up or down approximately the same amount.

- Sensor height should be adjusted for BGA repair due to the BGA device being recessed into the HFC nozzle.

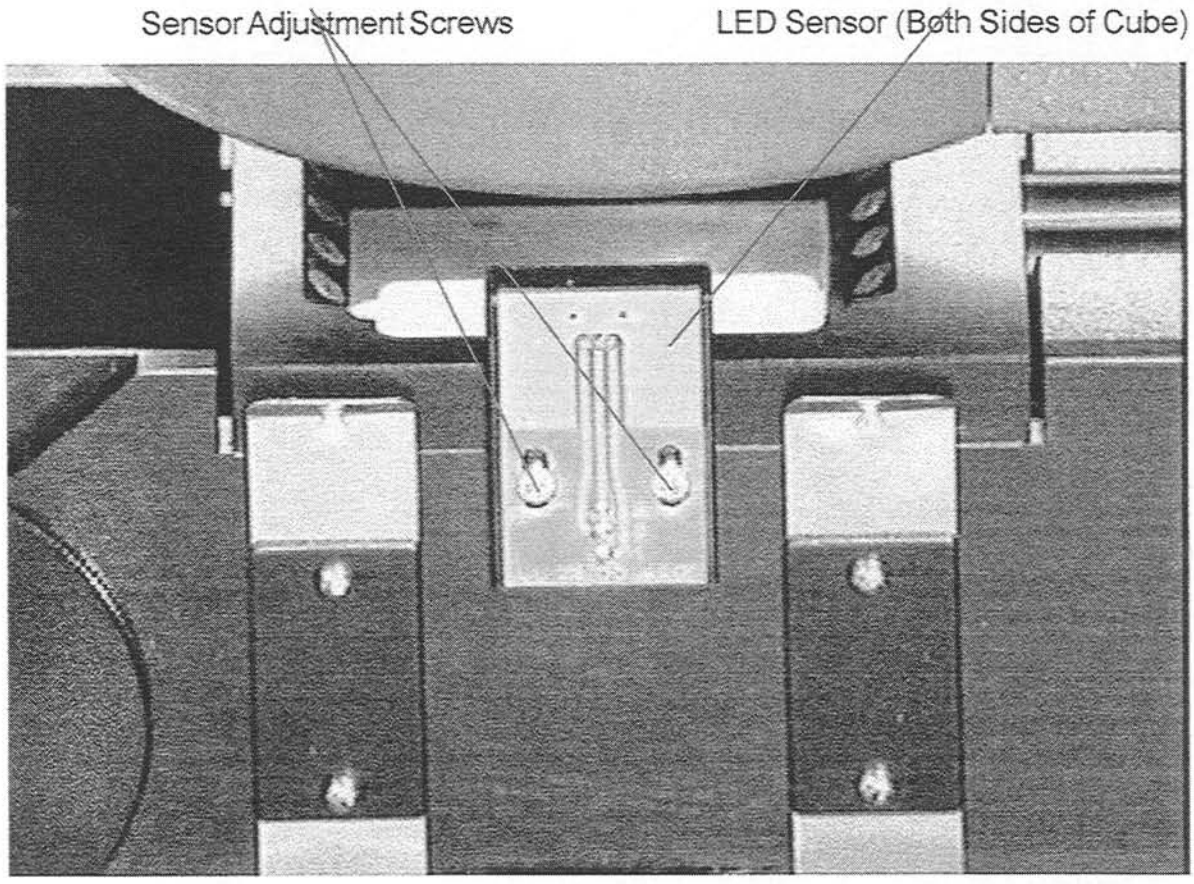

Heater Head Assembly And Element

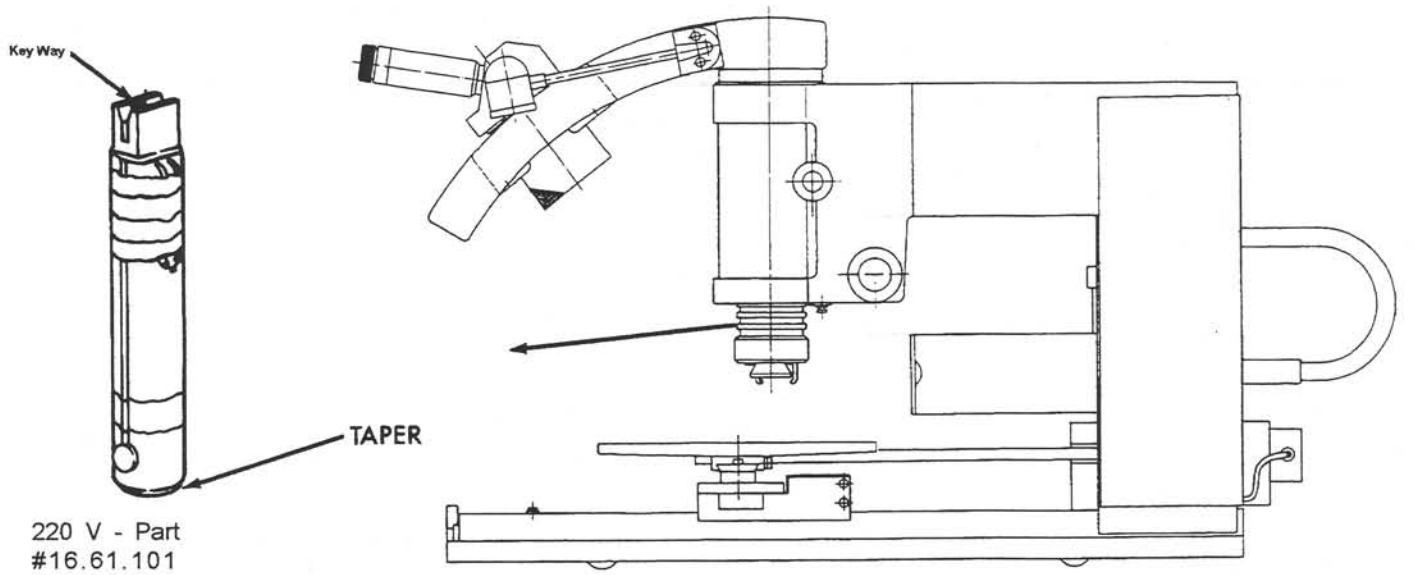

220 V - Part #16.61.101

Replacement of heater element:

1. Disconnect main power line.
2. Unscrew mounting knob (1) and remove heat shield (2) from heater head assembly.
3. Using height adjustment knob, lower assembly to the bottommost position.
4. Remove the allen head screws from the heater element cap - carefully separate.
5. After noting the position of the key way (for reinstallation of the element), carefully hold the connector and remove the element from the heater housing.
6. Place the new element in the housing, making sure the tapered end seats fully.
7. Replace the cap with the key way properly aligned to the element. Be sure the gasket is installed.
8. Screw down cap evenly so the fit is snug. Be careful not to over tighten the element (the element can be crushed). Be sure an air-tight seal is created.
9. Perform heater calibration.

Heating Element

*To check condition of heater element, use a digital ohm meter and record pin locations #2 and #6. Approximately 60.5 +/- 1 ohm indicates heating element in good condition.

220 V - Part #16.61.101

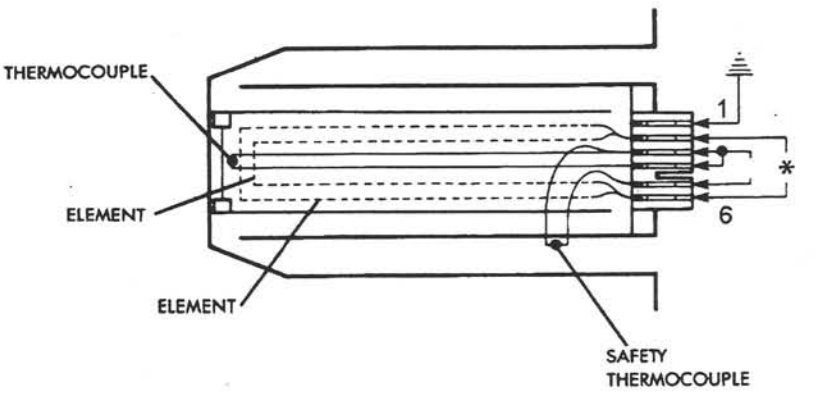

Temperature Controller Board Replacement And System Control Board

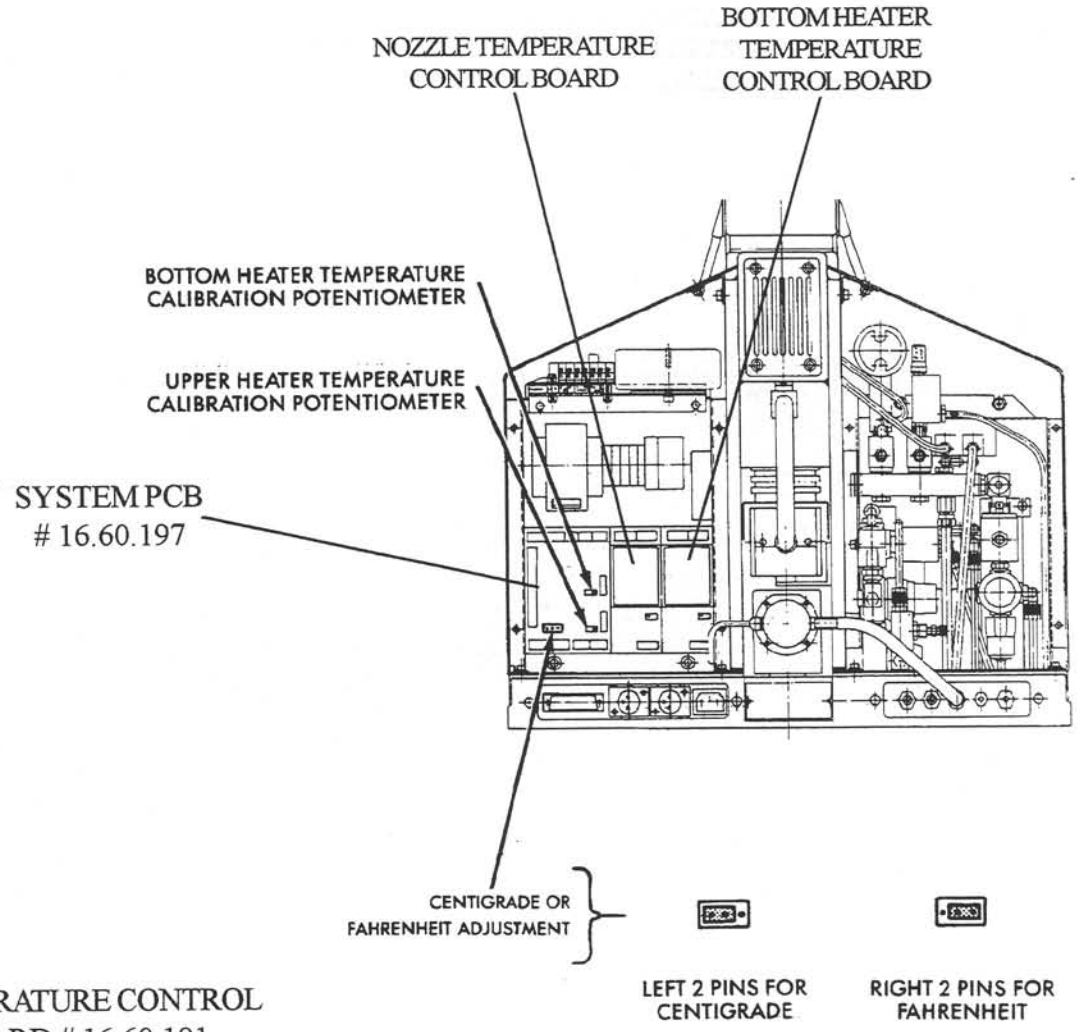

TEMPERATURE CONTROL)ARD # 16.60.191

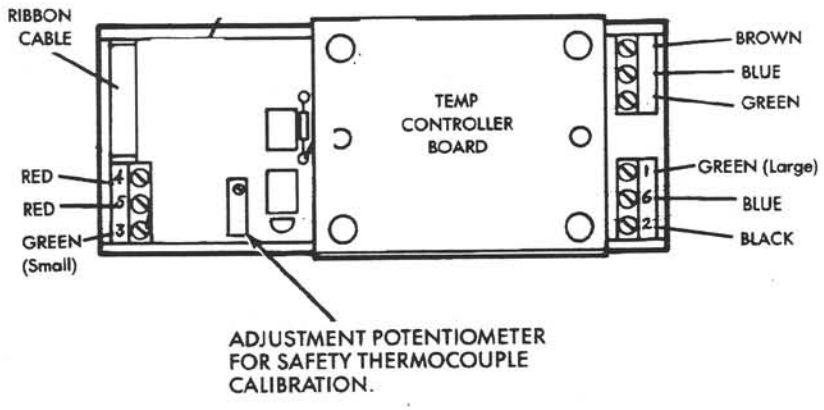

Height Adjustment

Should the friction in the "Z" axis movement need to be adjusted, locate the tension screw on the underside of white support arm. *Using a straight blade screwdriver,* ***rotate screw (1) until proper friction is obtained (maintains position).***

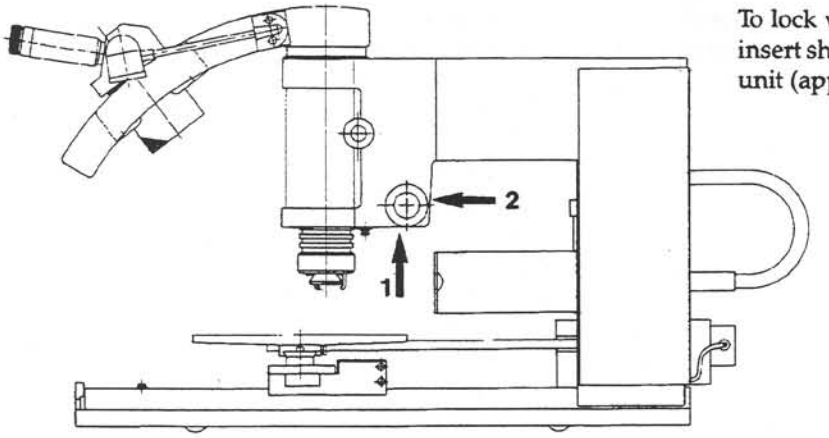

To lock vertical movement assembly and remove knobs, insert shaft through hole (2) located at back of heater head unit (approx. 4 mm dia.)

Gas Nozzle Vacuum Cup

Flux vapors and heat will break down the silicone vacuum cup in the gas nozzle, causing it to become brittle and unable to maintain a seal for vacuum. If the component becomes difficult to remove, even though solder is molten, it is an indication the vacuum cup should be replaced.

Note: Remove the vacuum cup before cleaning the gas nozzle with flux removing chemicals as they will affect the vacuum cup material. Part #VC916S-1/4, VC916S-3/8, VC916S-1/8GH and VC916S-1/2

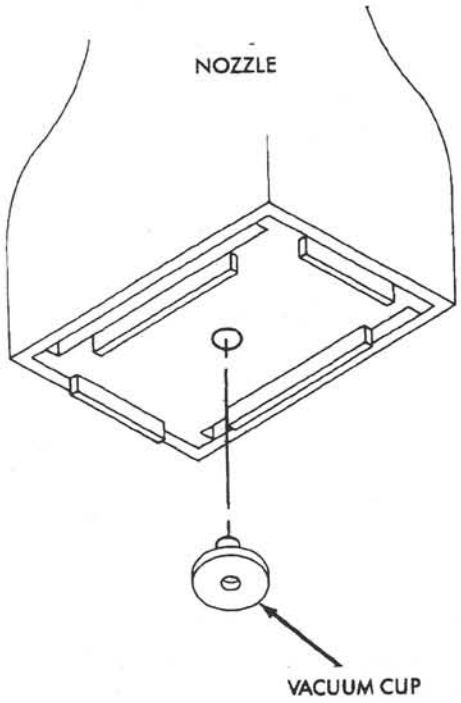

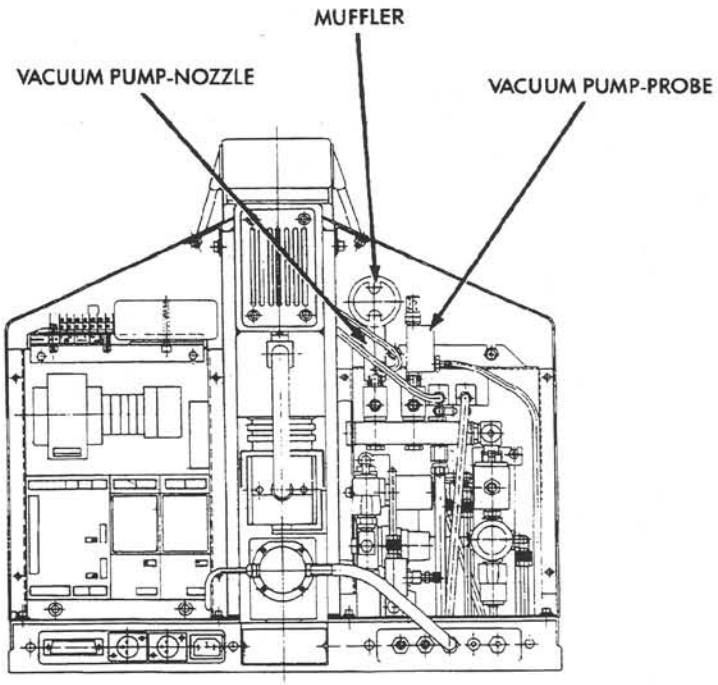

Flux vapors and/or material can enter the gas nozzle vacuum line. A plugged or cracked line will affect the vacuum to the vacuum cup. Clean and/or replace if necessary. Part #91.34.109.

Should material accumulate in the Vacuum Transducer Pump, disassemble and remove the material using a solvent. Be careful not to deform internal portion. Part # HAV-128-DRS.

Material can also deposit in the muffler causing back pressure to the nozzle vacuum pump. Remove material or replace muffler. Part #SIFZ.

Y- BEARING ADJUSTMENT

TOOLS
1\8 Inch Allen
3mm Allen

Reference Drawing B

NOTE: All screws are referred to as wrench size needed for procedure.

1) Bring the carrier to the forward most position, center carrier, and lock in place.

2) Remove the two 1\8" Allen screws #3 holding the dovetail to the carrier. (Refer to drawing C)

3) Lift the diffuser plate and locate the 4 access holes to the x-bearing plate. Loosen two 1/16 set screws #4 Drawing A. Remove the front two 3mm allen screws, #2 Drawing A. Loosen rear two only.

4) The carrier assembly is now free of the y-bearing plate #3. Move the carrier assembly to the back of the DRS in order to access the Y- bearing.

5) Tighten the 2 3mm Allen screws #1 holding the left bearing to the y-bearing plate.

6) To adjust the y-bearings loosen the two 3mm Allen screws #1 that hold the right side bearing to the y-bearing plate.

7) Tighten a small amount on the 3mm Allen #2 in the center of the right side bearing. Tighten the two 3mm Allen #1 screws holding the right bearing.

8) Check the y-bearing assembly for excessive play by twisting the bearing plate left and right. There should be less than 1\16" play in the assembly.

9) The bearing assembly is adjusted correctly when the left to right play is less than 1\16" and the bearing assembly moves freely from front to back.

10) Repeat steps 6-8 until no more adjustment is necessary.

11) Reattach the carrier and x-bearing plate to the y-bearing plate.

12) Attach the carrier / diffuser assembly to the x-axis.

DIFFUSER LEVELING

TOOLS
Free Standing Board Support
1\8 Inch Allen
1\16 Inch Allen

1\4 Inch Plate Glass 8x10 Inch Square

Reference Drawing C

NOTE: All screws are referred to as wrench size needed for procedure.

1) Use the12" board support to set height and levelness of the diffuser plate.

2) Place 1\4" plate glass in carrier. Center the glass over diffuser and lock in place.

3) Place 12" board support on the front left of the diffuser.

4) Slide the support under the glass. The diffuser plate should be adjusted so the support contacts the glass consistently at various points on the plate.

NOTE: The support should just touch the glass and still be free to move

5) Remove the board support.

6) ADJUSTMENT: Loosen the(2) 1\8" Allen screws #3 on both left and right side of diffuser.

7) Tighten or loosen the front left 1\16" Allen screw (#4) in order to increase or decrease pressure of the board support to the glass; as determined in step 4.

8) Tighten the 2 1\8" Allen screws (#3).

NOTE: Do not over tighten # 3 screws. This will adversely effect the leveling procedure.

9) Place the board support back on the diffuser and slide under the glass. Check for firm contact with the glass and freedom of movement.

10) Repeat steps 4-9 on all 4 corners of the diffuser until no more adjustment is needed.

CARRIER LEVELING

TOOLS
Ncal 4 Nozzle
5\32 Allen
3\32 Allen

1\4 Inch plate glass 8 x 10 Inches square

Reference Drawing A

NOTE: All screws are referred to as wrench size needed for procedure.

1) Attach the Ncal 4 nozzle to the DRS.

2) Place the 1\4" plate glass in the carrier arms. Center the glass from front to back of the carrier arms. Lock the glass to the carrier.

3) Center the glass under the nozzle from front to back and left to right. Lock the carrier.

4) The blade of the nozzle should run from left to right as viewed from the front of the DRS.

5) Lower the nozzle until the blade is just above the glass. Do not hit the glass with the blade of the nozzle.

NOTE: If the nozzle hits the glass plate, raise the nozzle, release the nozzle clamps, and then reclamp the nozzle into place.

6) View the gap between the bottom of the blade and the top of the glass. The gap should appear even across the span of the blade.

7) If the gap is off adjust as follows: Determine weather the right or left side of the blade has the greatest distance between the bottom of the blade and the top of glass.

8) Raise the nozzle 1 inch off of the glass. Go to the outside edge of the carrier assembly as determined in step 7 to make adjustments. Loosen the two 5\32" Allen screws #8 that hold the carrier arms to the carrier rail #6 . Tighten the 3\32" Allen screws #7 , 1\8 of a turn. Tighten the 2 5\32" Allen screws (#8) that hold the carrier arms.

9) Repeat steps 5 - 8 until no more adjustment is needed.

10) Turn the nozzle 90 degrees and repeat steps 5-9 for adjustment of carrier front to back.

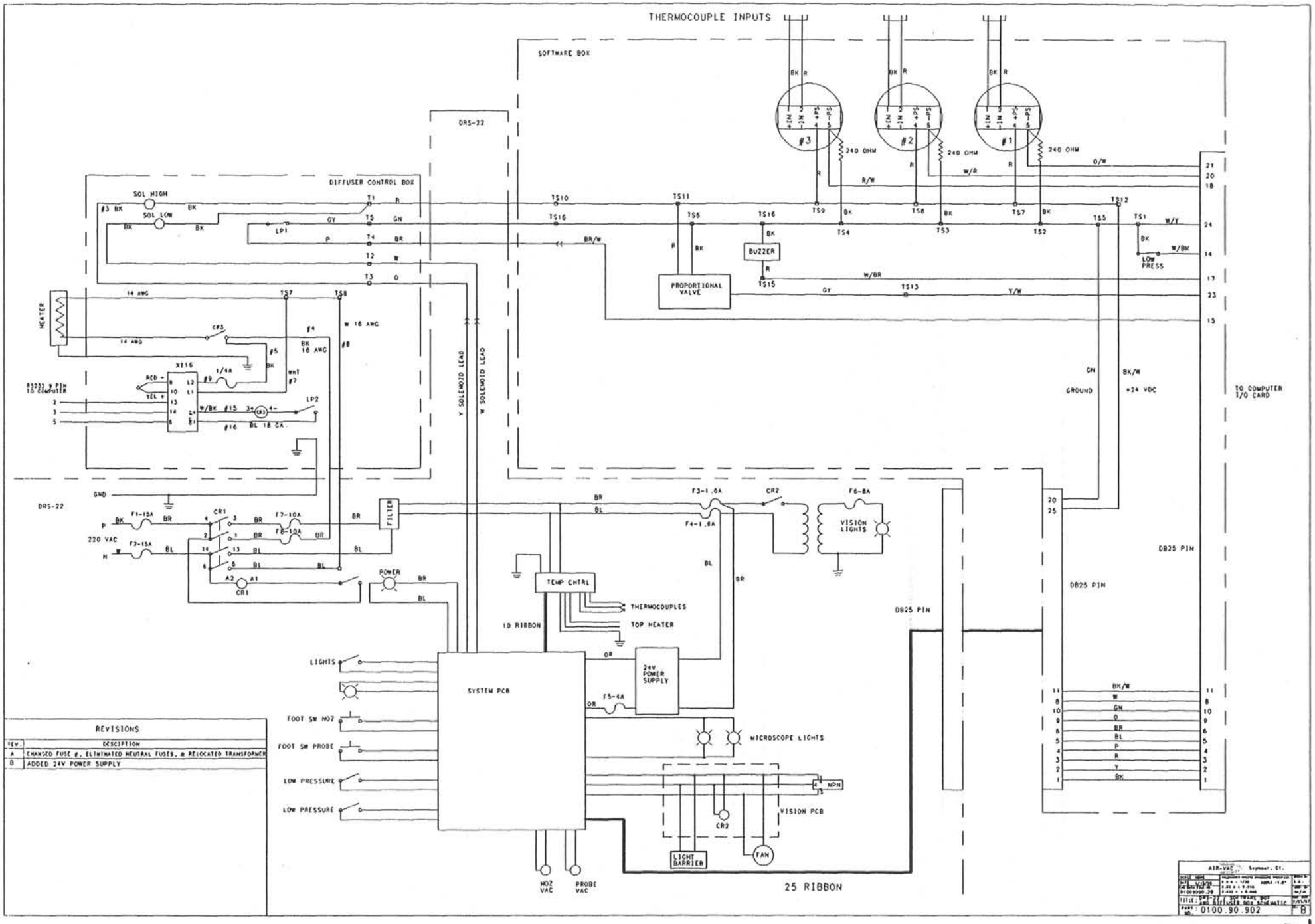
THERMOCOUPLE INPUTS
SOFTWARE BOX
DRS-22
DIFFUSER CONTROL BOX
SOL HIGH
SOL LOW
HEATER
XT16
RS232 9 PIN TO COMPUTER
LP1
LP2
CR3
CR1
CR2
F1-15A
F2-15A
F7-10A
F8-10A
F3-1.6A
F4-1.6A
F6-8A
F5-4A
220 VAC
GND
FILTER
POWER
TEMP CNTRL
THERMOCOUPLES
TOP HEATER
10 RIBBON
SYSTEM PCB
24V POWER SUPPLY
LIGHTS
FOOT SW NOZ
FOOT SW PROBE
LOW PRESSURE
LOW PRESSURE
MICROSCOPE LIGHTS
VISION PCB
NPN
LIGHT BARRIER
FAN
NOZ VAC
PROBE VAC
25 RIBBON
Y SOLENOID LEAD
W SOLENOID LEAD
PROPORTIONAL VALVE
BUZZER
LOW PRESS
GROUND
+24 VDC
TO COMPUTER I/O CARD
DB25 PIN
240 OHM
#1
#2
#3
REVISIONS
REV. DESCRIPTION
A CHANGED FUSE #, ELIMINATED NEUTRAL FUSES, & RELOCATED TRANSFORMER
B ADDED 24V POWER SUPPLY
AIR-VAC Seymour, Ct.
TITLE: DRS-22 / SOFTWARE BOX AND DIFFUSER BOX SCHEMATIC
PART NO. 0100.90.902
B

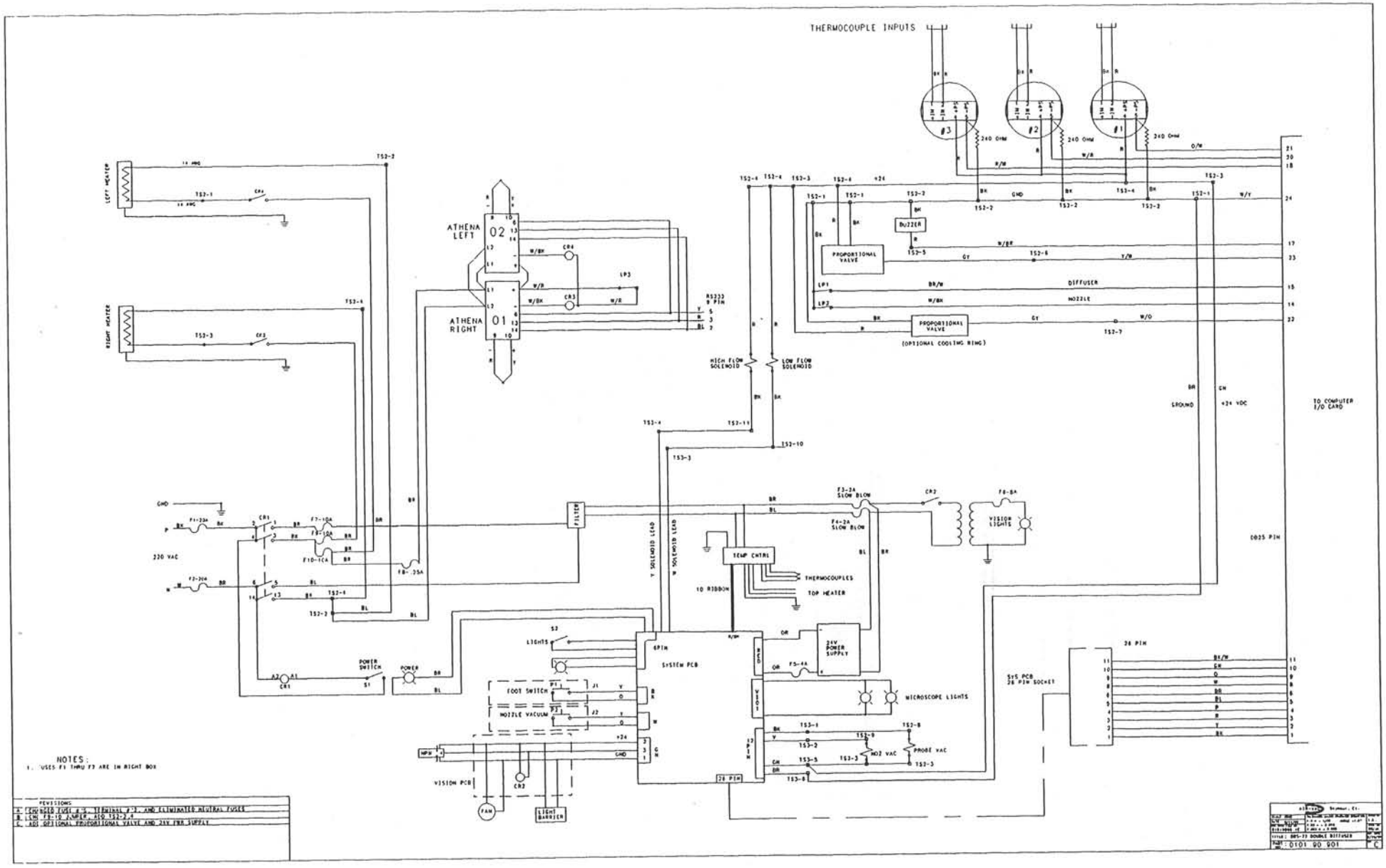
THERMOCOUPLE INPUTS
#3
#2
#1
240 OHM
ATHENA LEFT
02
ATHENA RIGHT
01
LEFT HEATER
RIGHT HEATER
RS232 9 PIN
PROPORTIONAL VALVE
BUZZER
DIFFUSER
NOZZLE
(OPTIONAL COOLING RING)
HIGH FLOW SOLENOID
LOW FLOW SOLENOID
GROUND
+24 VDC
TO COMPUTER I/O CARD
DB25 PIN
220 VAC
FILTER
Y SOLENOID LEAD
W SOLENOID LEAD
TEMP CNTRL
THERMOCOUPLES
TOP HEATER
10 RIBBON
VISION LIGHTS
24V POWER SUPPLY
MICROSCOPE LIGHTS
SYSTEM PCB
6PIN
LIGHTS
FOOT SWITCH
NOZZLE VACUUM
POWER SWITCH
POWER
VISION PCB
FAN
LIGHT BARRIER
NOZ VAC
PROBE VAC
26 PIN
SYS PCB 26 PIN SOCKET
NOTES:
1. FUSES F1 THRU F3 ARE IN RIGHT BOX
REVISIONS
A CHANGED FUSE #'S, TERMINAL #'S, AND ELIMINATED NEUTRAL FUSES
B CHG F9-10 JUMPER, ADD TS2-2,4
C ADD OPTIONAL PROPORTIONAL VALVE AND 24V PWR SUPPLY
0101 90 901

Main print

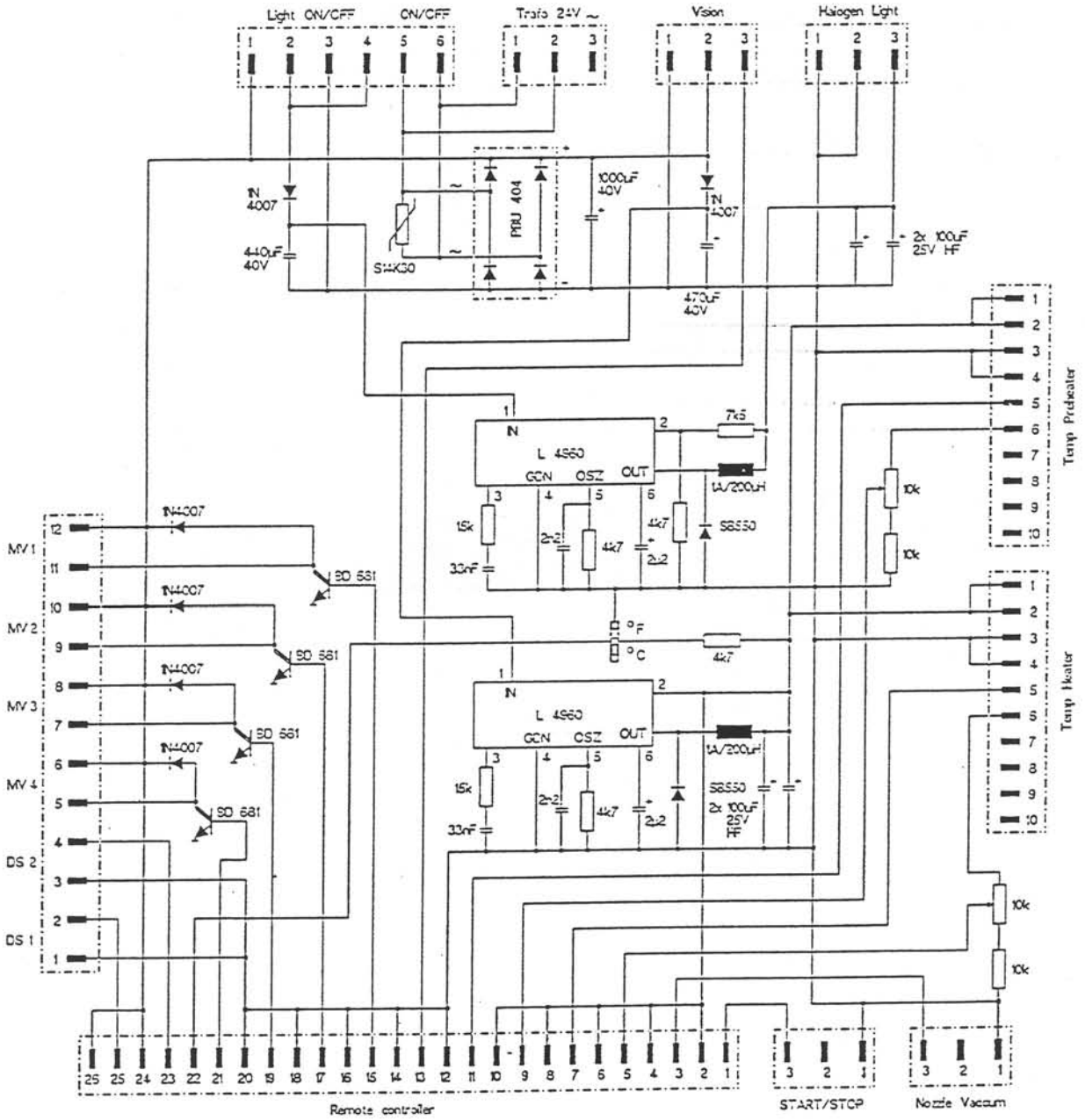
Light ON/OFF
ON/OFF
Trafo 24V ~
Vision
Halogen Light
1N 4007
440uF 40V
S14K30
MBJ 404
1000uF 40V
470uF 40V
2x 100uF 25V HF
L 4960
GEN
OSZ
OUT
7k5
1A/200uH
15k
33nF
2n2
4k7
2u2
SB550
10k
°F
°C
BD 681
MV 1
MV 2
MV 3
MV 4
DS 2
DS 1
Temp Preheater
Temp Heater
Remote controller
START/STOP
Nozzle Vacuum

Temperature Control Board

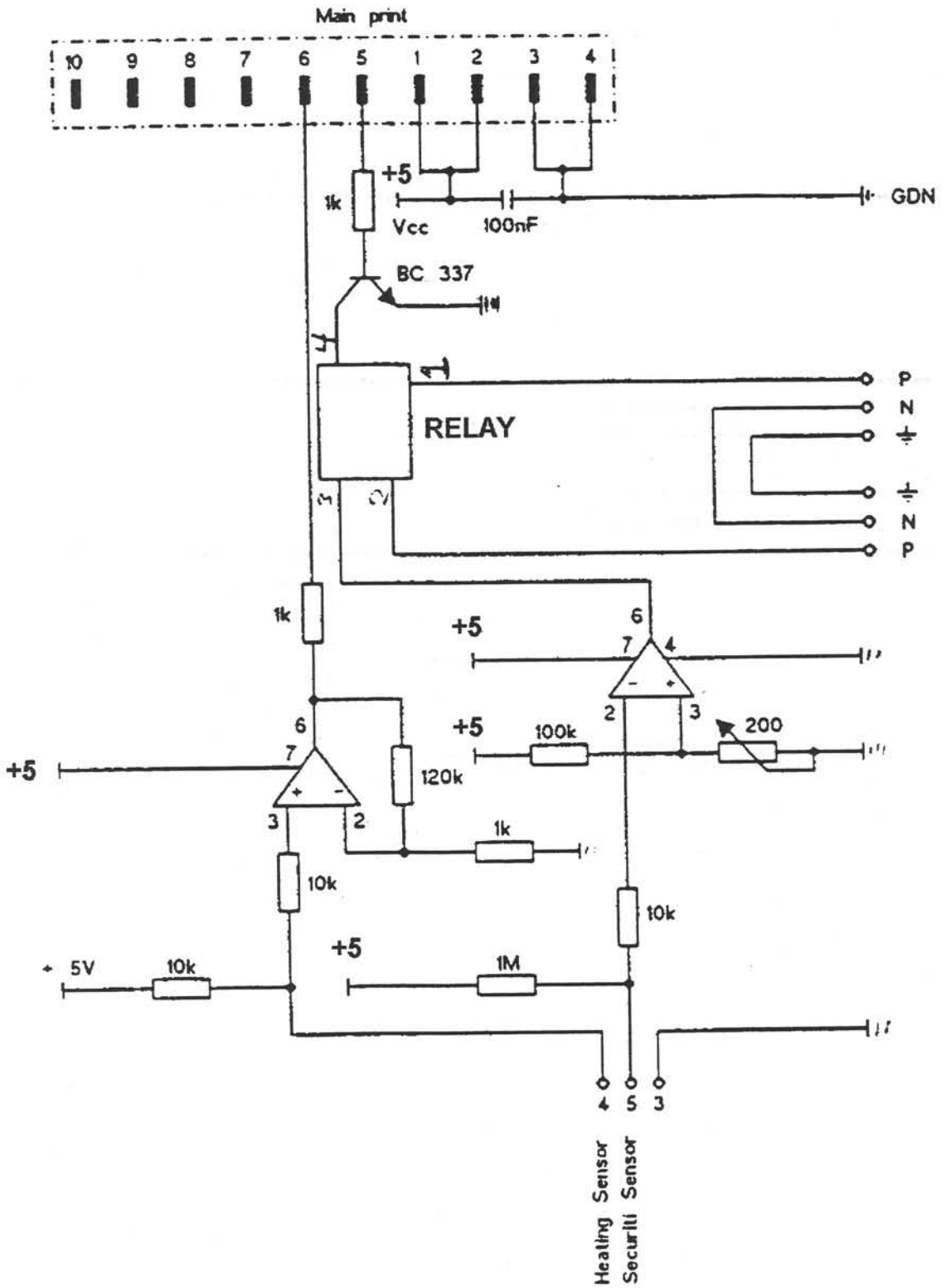

6 ft. Cable: Computer to Software Control Box
40 Pin / 25 Pin Connectors

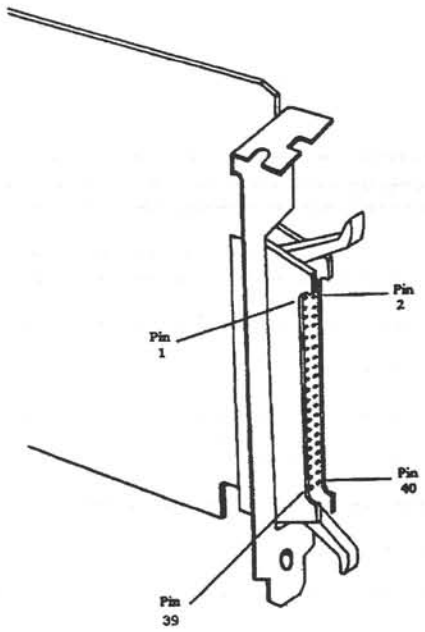

Pin No.	Signal Name
1	Cycle start footswitch signal digital input (black)
2	Nozzle vacuum footswitch signal digital input (yellow)
3	Upper heater temperature voltage analog input (red)
4	Upper heater control digital output (purple)
5	Lower heater temperature voltage analog input (blue)
6	Lower heater control digital output (brown)
7	
8	Low Flow Solenoid
9	Nozzle vacuum control digital output (green)
10	Probe vacuum control digital output (black/white)
11	High Flow Solenoid
12	
13	
14	Upper heater low pressure signal digital input (white/black)
15	Lower heater low pressure signal digital input (brown/white)
16	
17	Audible buzzer control digital output (orange)
18	Thermocouple #3 temperature voltage analog input (white/brown)
19	
20	Thermocouple #2 temperature voltage analog input (red/white)
21	Thermocouple #1 temperature voltage analog input (white/red)
22	Lower heater electronic flow meter control analog output (orange/white)
23	Upper heater electronic flow meter control analog output (white/orange)
24	Digital ground (yellow/white)
25	

40 Pin Computer Female Connector

Pin No.	Signal Name	Pin No.	Signal Name
1 (Arrow)		2	Digital ground (yellow/white)
3		4	
5		6	Thermocouple #3 temperature voltage analog input (white/brown)
7		8	Thermocouple #2 temperature voltage analog input (red/white)
9	Thermocouple #1 temperature voltage analog input (white/red)	10	Lower heater temperature voltage analog input (blue)
11	Upper heater temperature voltage analog input (red)	12	
13		14	Audible buzzer control digital output (orange)
15	Probe vacuum control digital output (black/white)	16	Lower heater control digital output (brown)
17	High Flow Solenoid	18	Nozzle vacuum control digital output (green)
19	Upper heater control digital output (purple)	20	Low Flow Solenoid
21	Lower heater low pressure signal digital input (brown/white)	22	Upper heater low pressure signal digital input (white/black)
23	Jumpered to pin 27 (black) (+5 Volt DC)	24	Jumpered to pin 28 (black) (+5 Volt DC)
25	Jumpered to pin 21 (black) (+5 Volt DC)	26	Jumpered to pin 22 (black) (+5 Volt DC)
27	Cycle start footswitch signal digital input (black)	28	Nozzle vacuum footswitch signal digital input (yellow)
29		30	
31		32	
33		34	
35		36	Lower heater electronic flow meter control analog output (orange/white)
37		38	Upper heater electronic flow meter control analog output (white/orange)
39		40	

25 Pin Software Control Box Female Connector

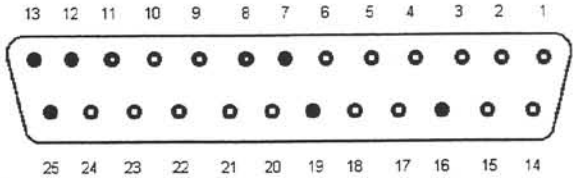

Note: ● Represents Electrical Connection.

(Front View)

2 ft. Cable: DRS22 to Software Control Box
25 Pin / 25 Pin Connectors

25 Pin DRS22 Male Connector

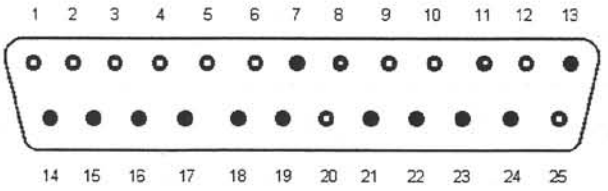

Note: ● Represents Electrical Connection.

(Front View)

Pin No.	Signal Name
1	Cycle start footswitch signal digital output (black)
2	Nozzle vacuum footswitch signal digital output (yellow)
3	Upper heater temperature voltage analog output (red)
4	Upper heater control digital input (purple)
5	Lower heater temperature voltage analog output (blue)
6	Lower heater control digital input (brown)
7	
8	Low Flow Solenoid (white / brown)
9	Nozzle vacuum control digital input (orange)
10	Probe vacuum control digital input (green)
11	High Flow Solenoid (red / white)
12	Digital ground (black/white)
13	
14	
15	
16	
17	
18	
19	
20	Digital ground (white/black)
21	
22	
23	
24	
25	24 volt DC (brown/white)

Pin No.	Signal Name
1	Cycle start footswitch signal digital output (black)
2	Nozzle vacuum footswitch signal digital output (yellow)
3	Upper heater temperature voltage analog output (red)
4	Upper heater control digital input (purple)
5	Lower heater temperature voltage analog output (blue)
6	Lower heater control digital input (brown)
7	
8	Low Flow Solenoid (white / brown)
9	Nozzle vacuum control digital input (orange)
10	Probe vacuum control digital input (green)
11	High Flow Solenoid (red / white)
12	Digital ground (black/white)
13	
14	
15	
16	
17	
18	
19	
20	Digital ground (white/black)
21	
22	
23	
24	
25	24 volt DC (brown/white)

25 Pin Software Control Box Male Connector

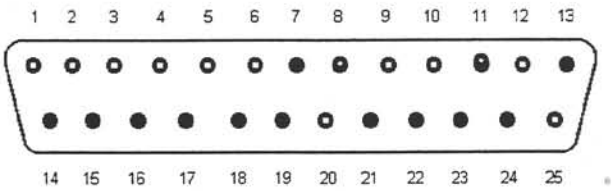

Note: ● Represents Electrical Connection.
(Front View)

Software Control Box
General Arrangement

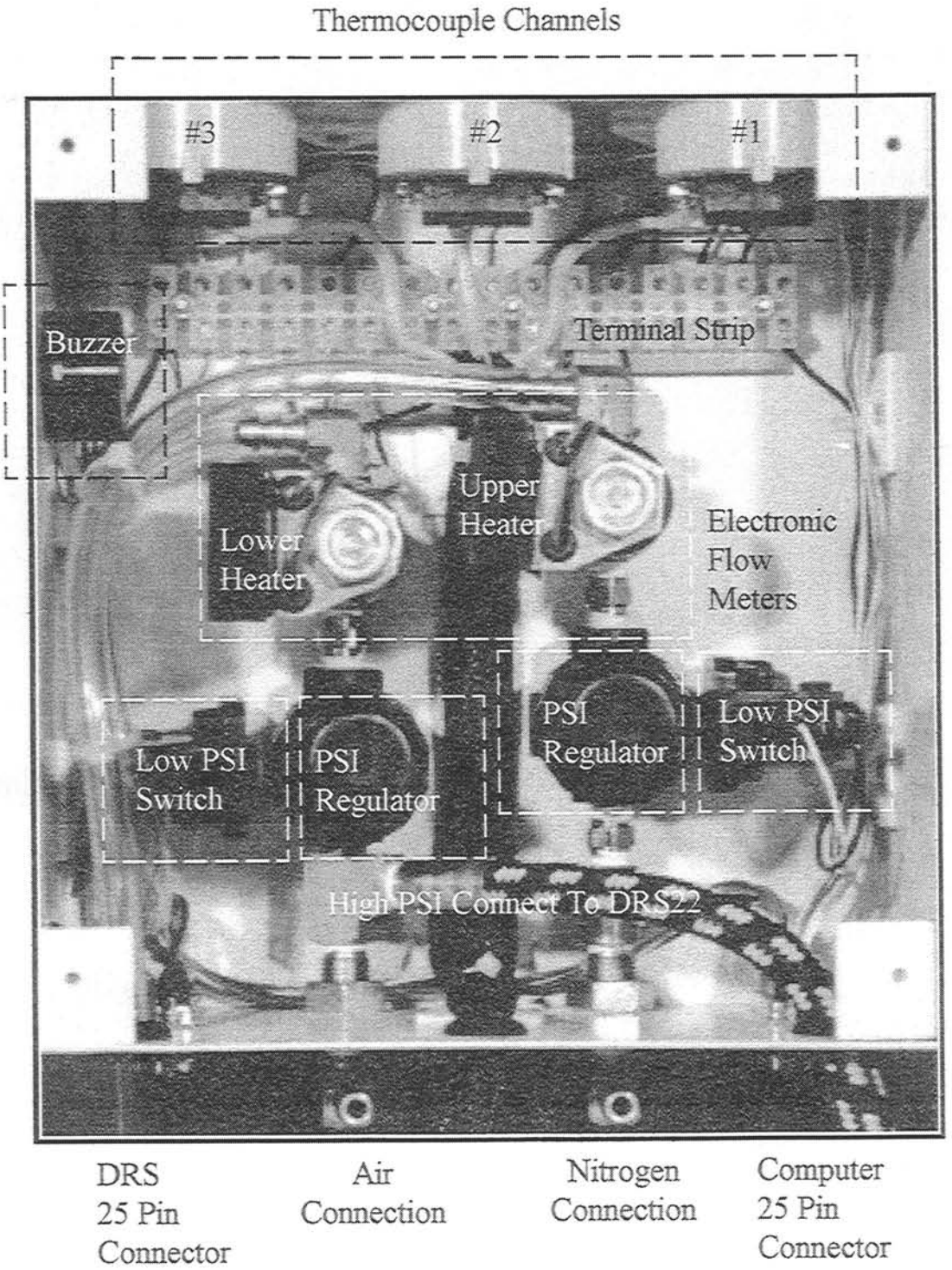

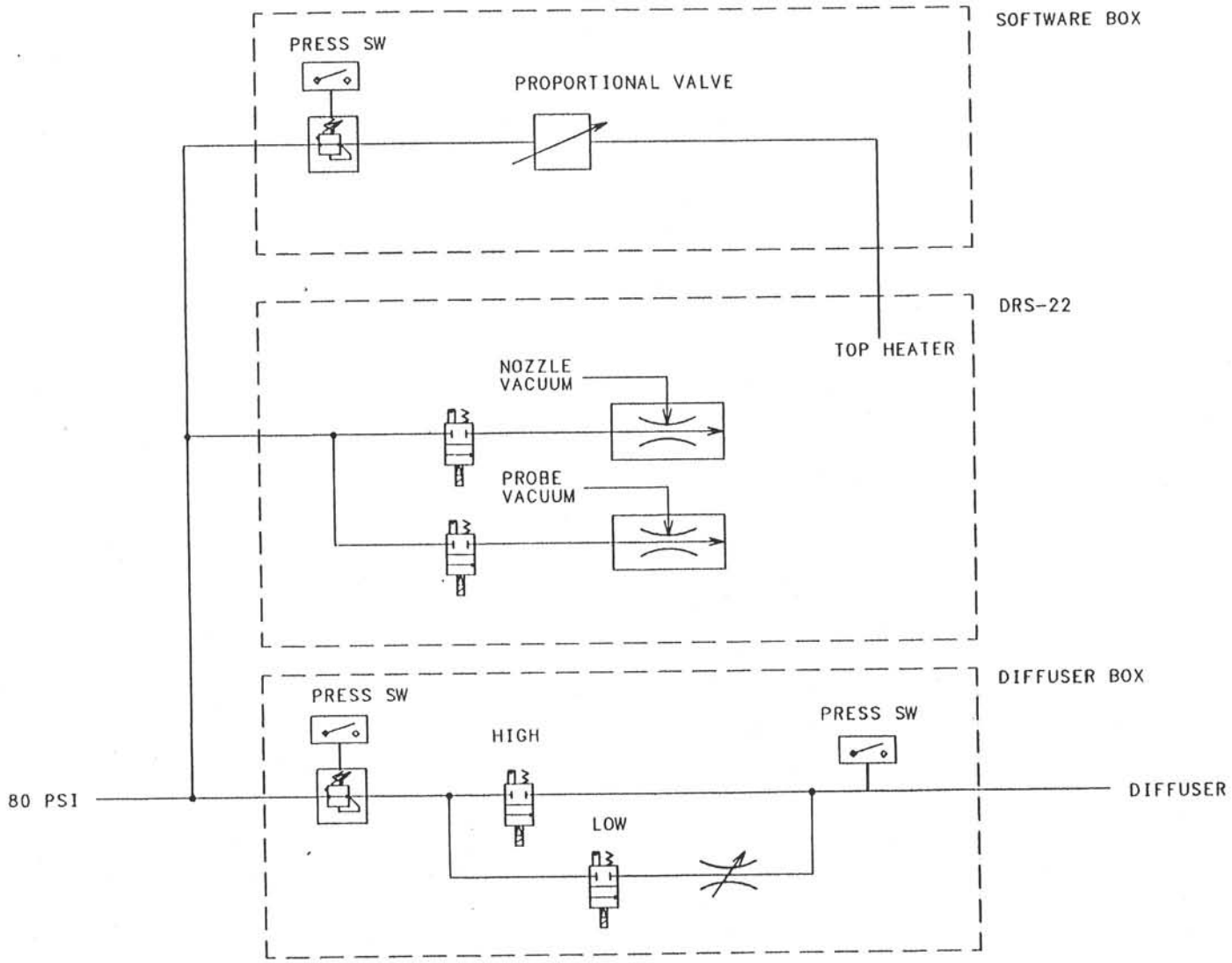

AIR-VAC Milford, Ct.		
SCALE none	TOLERANCES UNLESS OTHERWISE SPECIFIED	DRAWN BY JD
DATE 6/5/98	X.X = ± 1/32 ANGLE ±1.0°	APPR. BY DG
CAD DATA FILE NO. 91901.	X.XX = ± 0.010	REV. DATE X
TITLE: PNEMATICS-DIFFUSER	X.XXX = ± 0.005	REV.
PART NO.: 0100.90.901		

Software Control Box Schematic

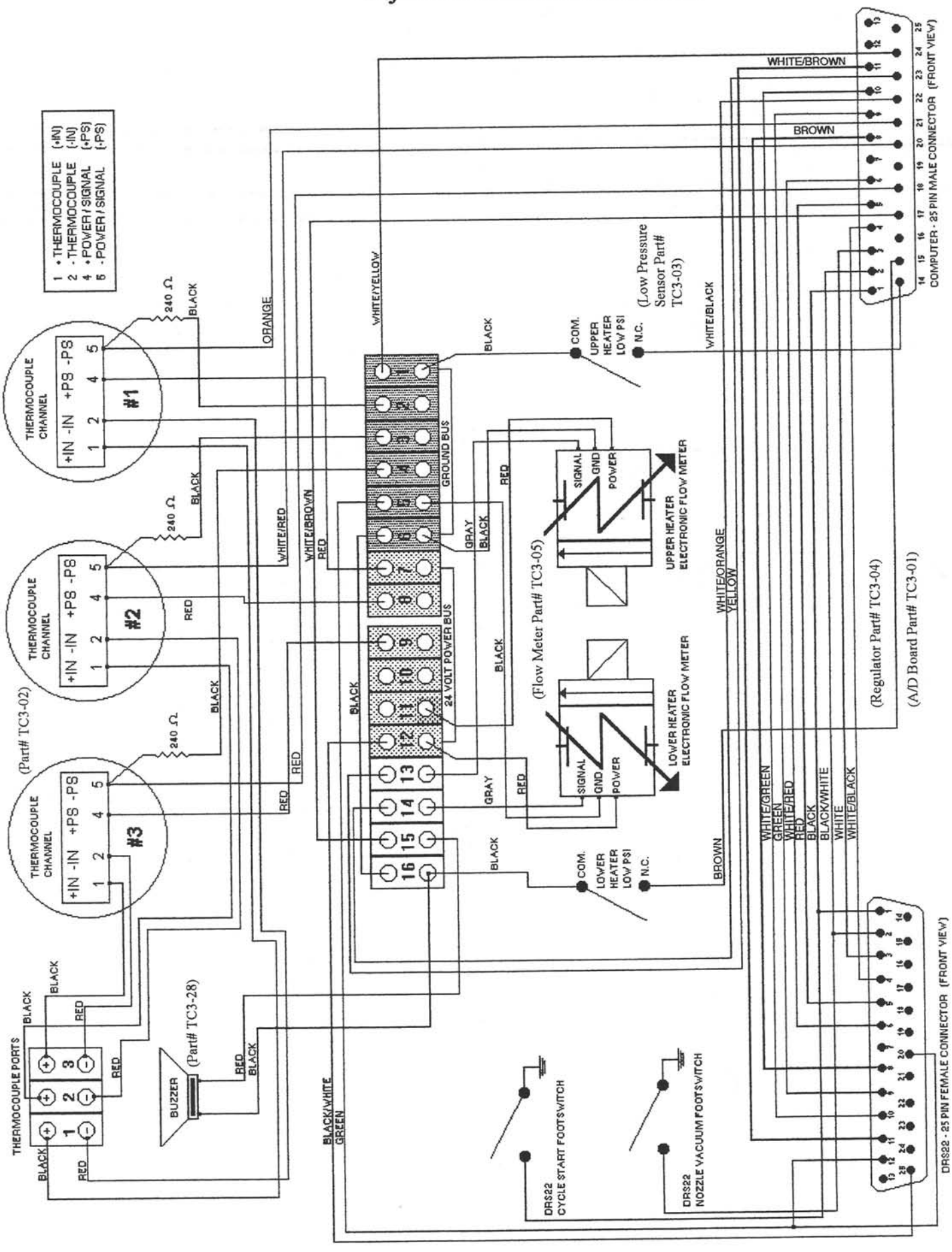

DRS22 Spare Parts List

X-Y Drive System

Part Number	Description
22.00.139	Rubber Pad
11.70.101	Spring
22.00.141	Ring (Guiding Sleeve)
22.00.157	Friction Brake Support
22.00.158	Friction Pad
22.00.159	Plate
10.21.179	Screw
22.00.153	Brake Shaft
22.00.156	Knob
22.00.154	Eccentric Knob (Brake Clamping Cam)

Microscope

Part Number	Description
22.03.125	Lamp (complete)
10.31.132	Support Screw
14.80.101	Eye Piece (10x)
14.80.100	Binocular "Wild"
22.00.299	Eccentric Screw
22.00.289	Support Screw
10.43.107	Spring Washer
22.00.228	Pressure Screw
11.70.144	Spring
22.00.288	Slide Pin
22.00.286	Push Pin
22.00.287	Washer
22.00.281	Lock Knob
11.70.146	Spring
14.80.102	Eye Cup

Power Supply - FiberOptic

Part Number	Description
16.40.122	Ring Transformer
16.60.196	Vision Connection Board (complete)

Heater Head Assembly

Part Number	Description
22.00.247	Roller
22.00.249	Vacuum Tube
22.00.83	Clamping Finger
22.01.59	Upper Cone
22.01.63	Spring
22.00.94	Spring Clip

DRS22 Spare Parts List (cont.)

Vacuum Pump Assembly

Part Number	Description
13.10.110	Air Solenoid
13.32.182	Plug Screw

Vertical Movement and Theta Rotation

Part Number	Description
22.00.219	Gear
22.00.222	Hub
22.00.223	Washer
22.00.228	Pressure Screw
22.00.230	Brake Pad
22.00.236	Clamp
11.20.100	Bushing
11.22.103	Guide Bushing
11.22.104	Guide Bushing
11.70.138	Spring
11.01.149	Belt
10.31.178	Cap
10.00.130	Stud

Additional DRS22 Spare Parts

Part Number	Description
22.00.317	Polarizing Filter
22.00.321	Vision Cube
22.00.314	FiberOptic Assembly
22.00.258	Heater Head Wire Harness
14.52.101	Halogen Bulb for PCB
16.31.119	Main Power Switch
10.40.464	Pulley
16.31.133	Main Power Switch Cap
16.31.134	Lamp Switch Cap

SPARE PARTS LIST

Part	Number
Heating Element (220 volt)	16.61.101
Flow Meter	13.32.202 (Base unit)
Eye Cups (Pair)	14.80.102
Temperature Control Board	16.60.191
Power/Light Switch	16.31.119
Red Cover (Power)	16.31.117
White Cover (Lights)	16.31.118
Bulb 28v/12w (Power/Lights)	16.32.101
Air Solenoid (Pneumatic)	13.10.108 (Base unit)
Air Solenoid (Vacuum)	13.10.110
Nozzle Vacuum Tubing (2 ft)	91.34.109
Vertical Movement Belt	11.01.149
Brass Pin (PCB Carrier Arm)	22.00.187 (Base unit)
Nylatch (mount) - White	12.04.105
Nylatch (knob) - Black	12.04.107
Nylatch (mount) - Black	12.04.104
Nylatch (knob) - Black	12.04.106
Halogen Bulb (Spot Lite - 12v/5w) (Microscope)	14.00.15
Nozzle Handling Plier (Large)	GNT4
Nozzle Handling Plier (Small)	GNT1
Vacuum Cup Assortment	VCASST
Nozzle Vacuum Transducer Pump	HAV128-DRS
Nozzle Vacuum Muffler	SIFZ
Vacuum Probe	3CP-100
Probe Tip	29A3
Vacuum Probe Tubing (6 ft)	FT-11
Syringe (5cc)	TS5LL
\Needle (.020 ID)	TS21X1
Discrete Tweezer	103A-CA
Fiber Optic Bulb	EPX
Probe Vacuum Transducer	AVR093H
Gasket, Heater Head Cap	21.00.98
Felt Vacuum Filter	F1AE

Heater Head Assembly

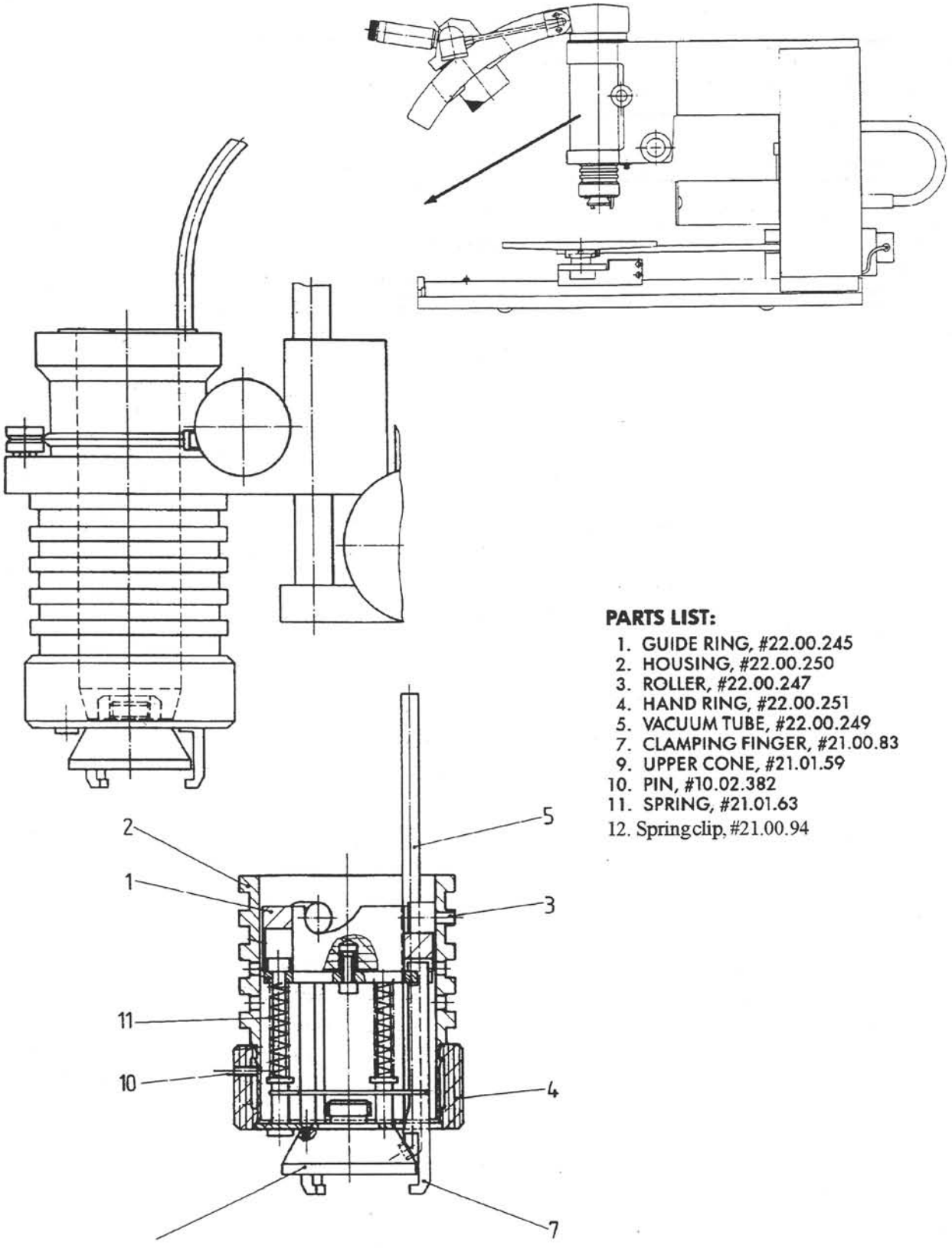

PARTS LIST:

1. GUIDE RING, #22.00.245
2. HOUSING, #22.00.250
3. ROLLER, #22.00.247
4. HAND RING, #22.00.251
5. VACUUM TUBE, #22.00.249
7. CLAMPING FINGER, #21.00.83
9. UPPER CONE, #21.01.59
10. PIN, #10.02.382
11. SPRING, #21.01.63
12. Springclip, #21.00.94

Power Supply - Fiber Optic

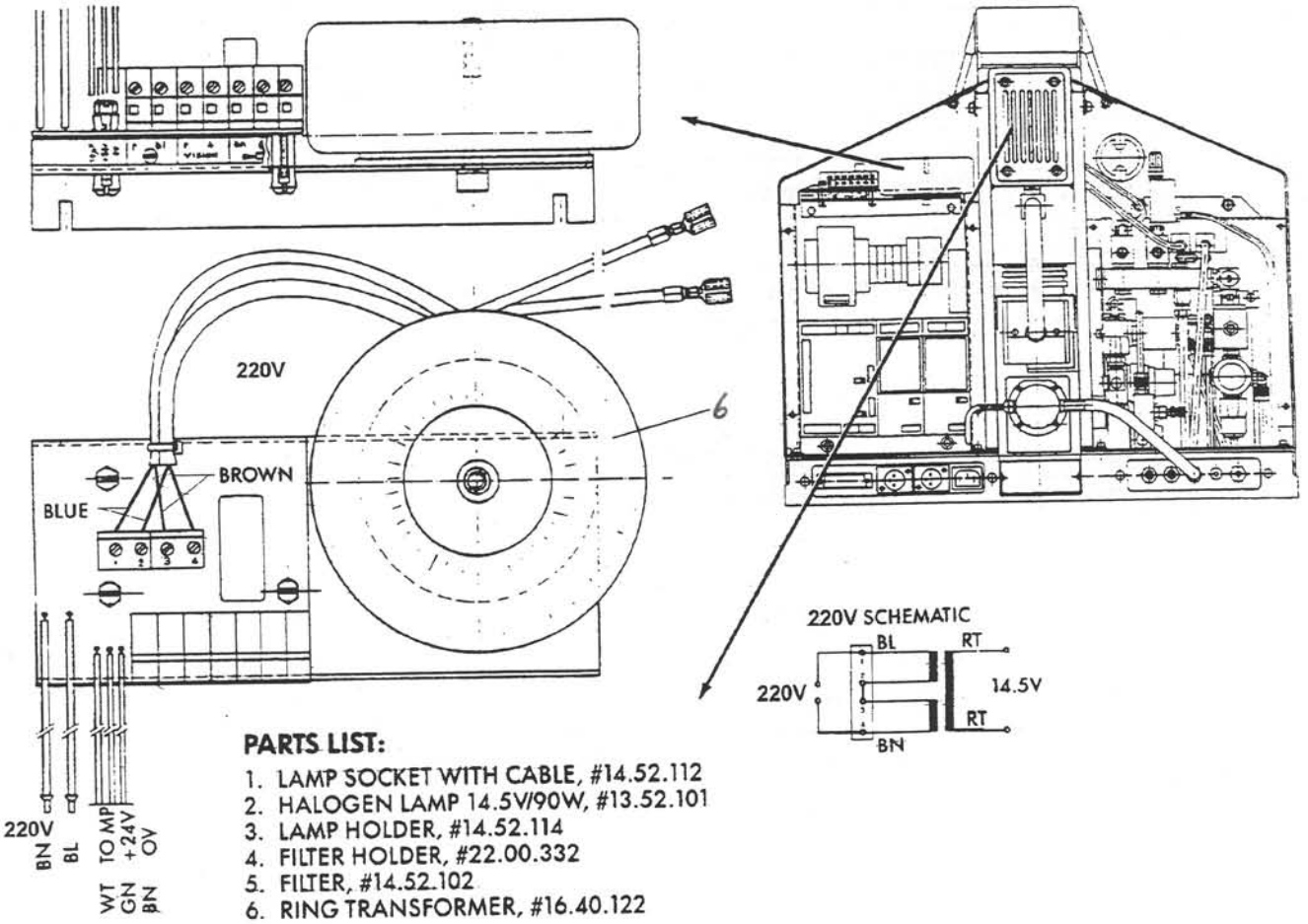

PARTS LIST:

1. LAMP SOCKET WITH CABLE, #14.52.112
2. HALOGEN LAMP 14.5V/90W, #13.52.101
3. LAMP HOLDER, #14.52.114
4. FILTER HOLDER, #22.00.332
5. FILTER, #14.52.102
6. RING TRANSFORMER, #16.40.122

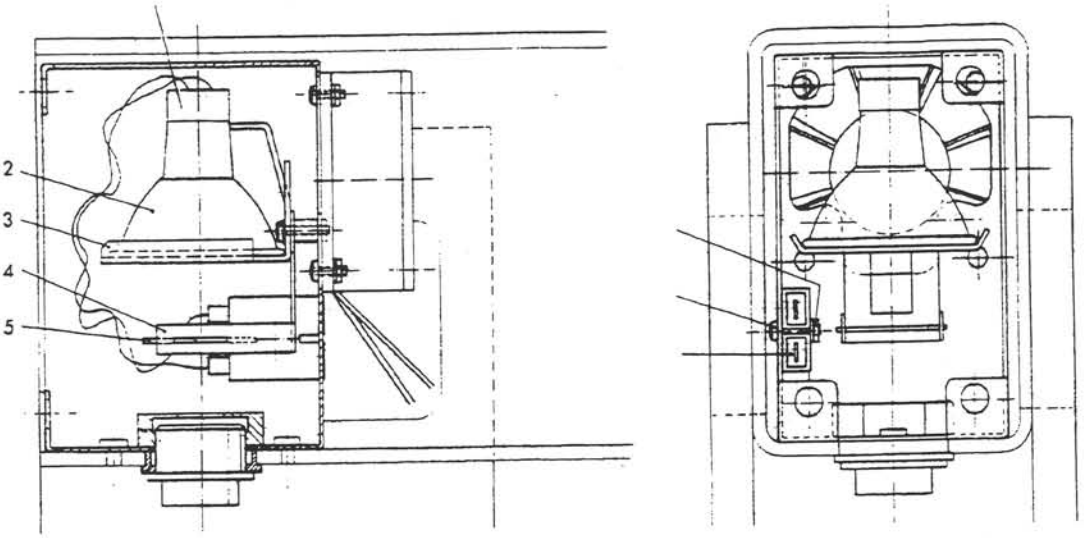

Fiber Optic Lamp Assembly

Microscope

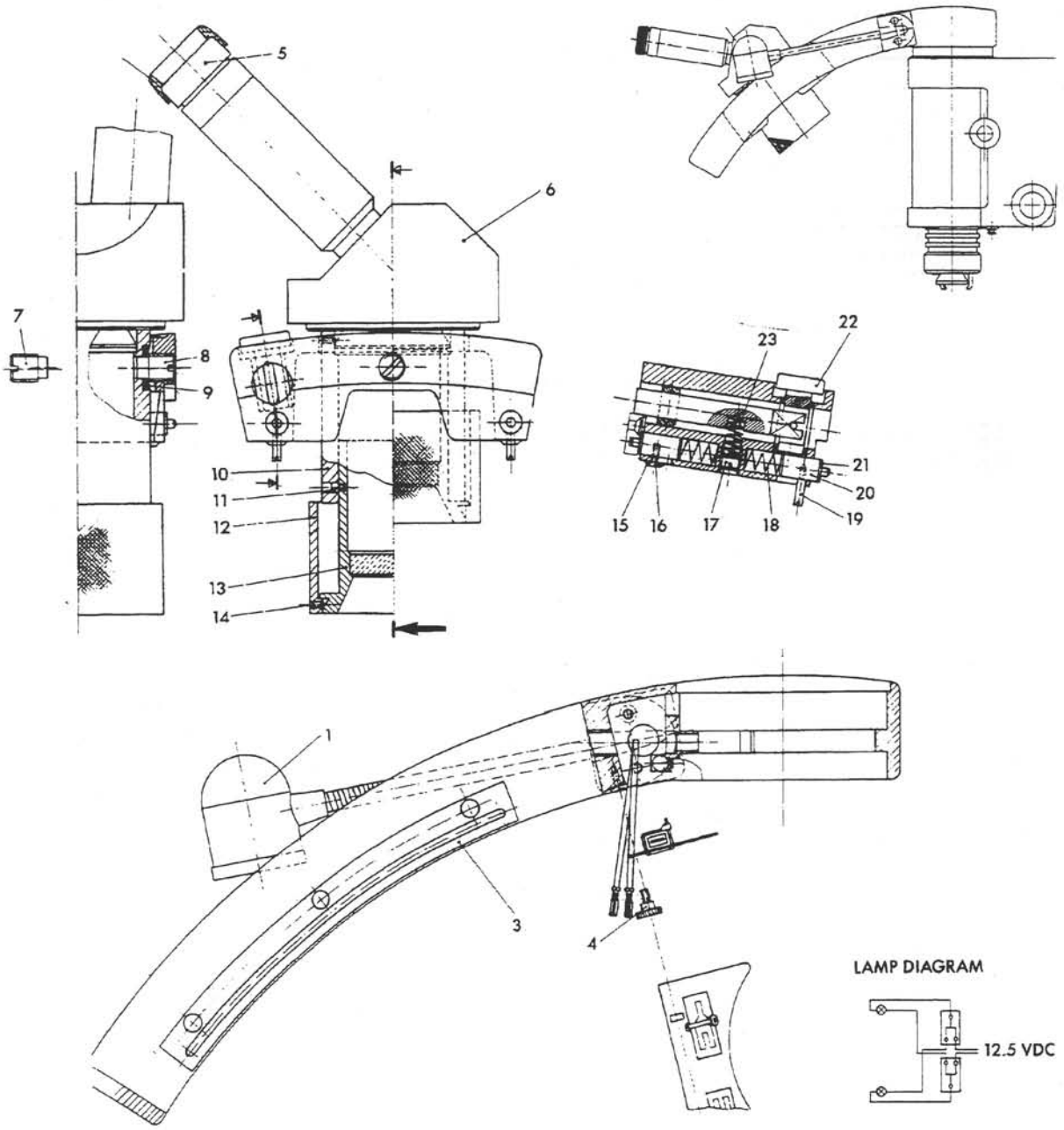

1. LAMP (complete), #22.03.125
3. GUIDE, #22.00.271
4. SUPPORT SCREW, #10.31.132
5. EYE PIECE (10X), #14.80.101
6. BINOCULAR "WILD", #14.80.100
7. ECCENTRIC SCREW, #22.00.299
8. SUPPORT SCREW, #22.00.289
9. SPRING WASHER, #10.43.107
10. MOUNTING RING, #22.00.292
11. GUIDE SCREW, #22.00.294
12. ROTATION RING, #22.00.293
13. FOCUSING RING, #22.00.290
14. SET SCREW M3X8, #10.02.104
15. WASHER, #10.40.496
16. SCREW M3X10, #10.04.126
17. PRESSURE SCREW, #22.00.228
18. SPRING, #11.70.144
19. SLIDE PIN, #22.00.288
20. PUSH PIN, #22.00.286
21. WASHER, #22.00.287
22. LOCK KNOB, #22.00.281
23. SPRING, #11.70,146
24. EYE CUP, #14.80.102

Vacuum Pump Assembly

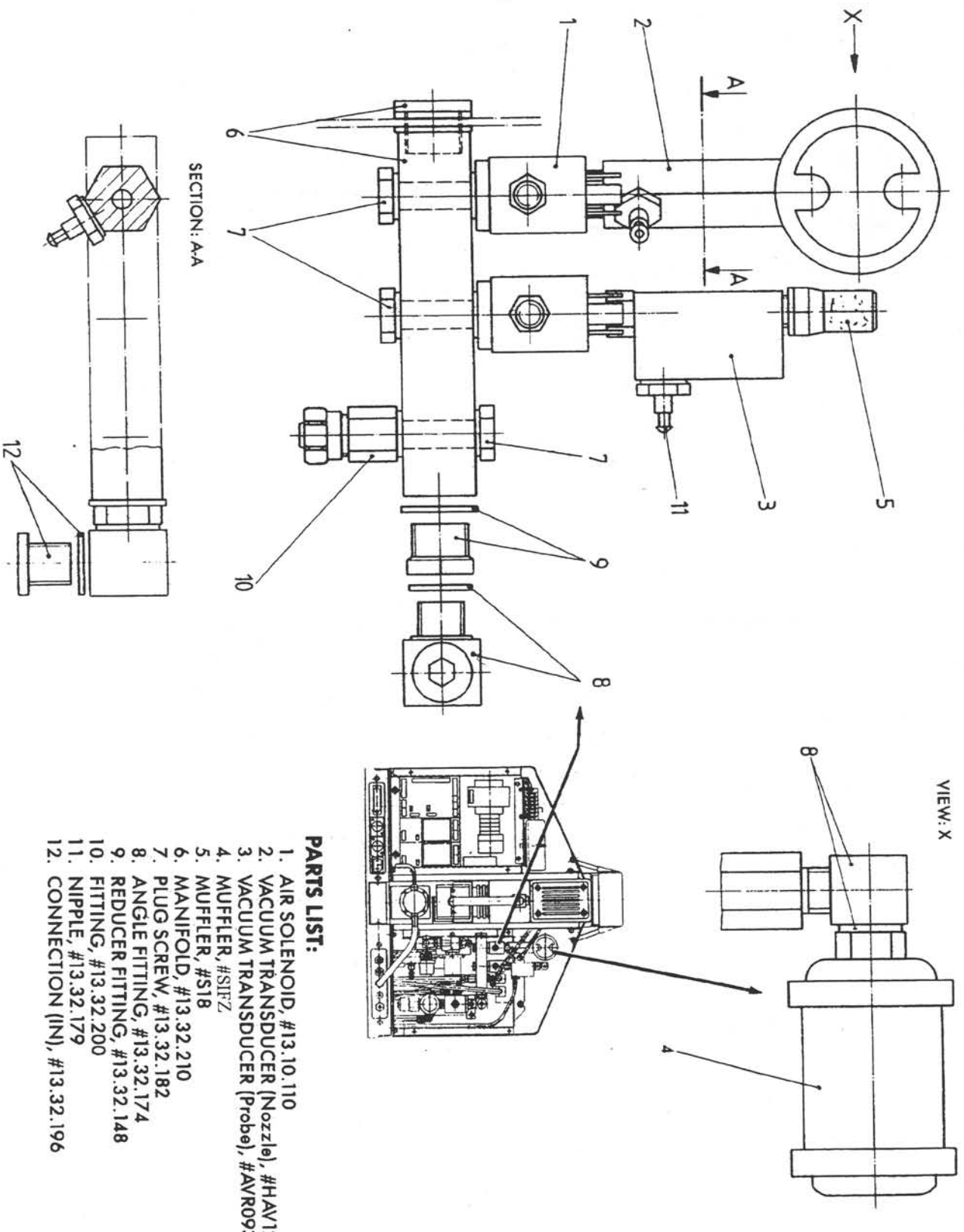

PARTS LIST:

1. AIR SOLENOID, #13.10.110
2. VACUUM TRANSDUCER (Nozzle), #HAV128-DRS
3. VACUUM TRANSDUCER (Probe), #AVR093H
4. MUFFLER, #SIFZ
5. MUFFLER, #S18
6. MANIFOLD, #13.32.210
7. PLUG SCREW, #13.32.182
8. ANGLE FITTING, #13.32.174
9. REDUCER FITTING, #13.32.148
10. FITTING, #13.32.200
11. NIPPLE, #13.32.179
12. CONNECTION (IN), #13.32.196

X-Y Drive System

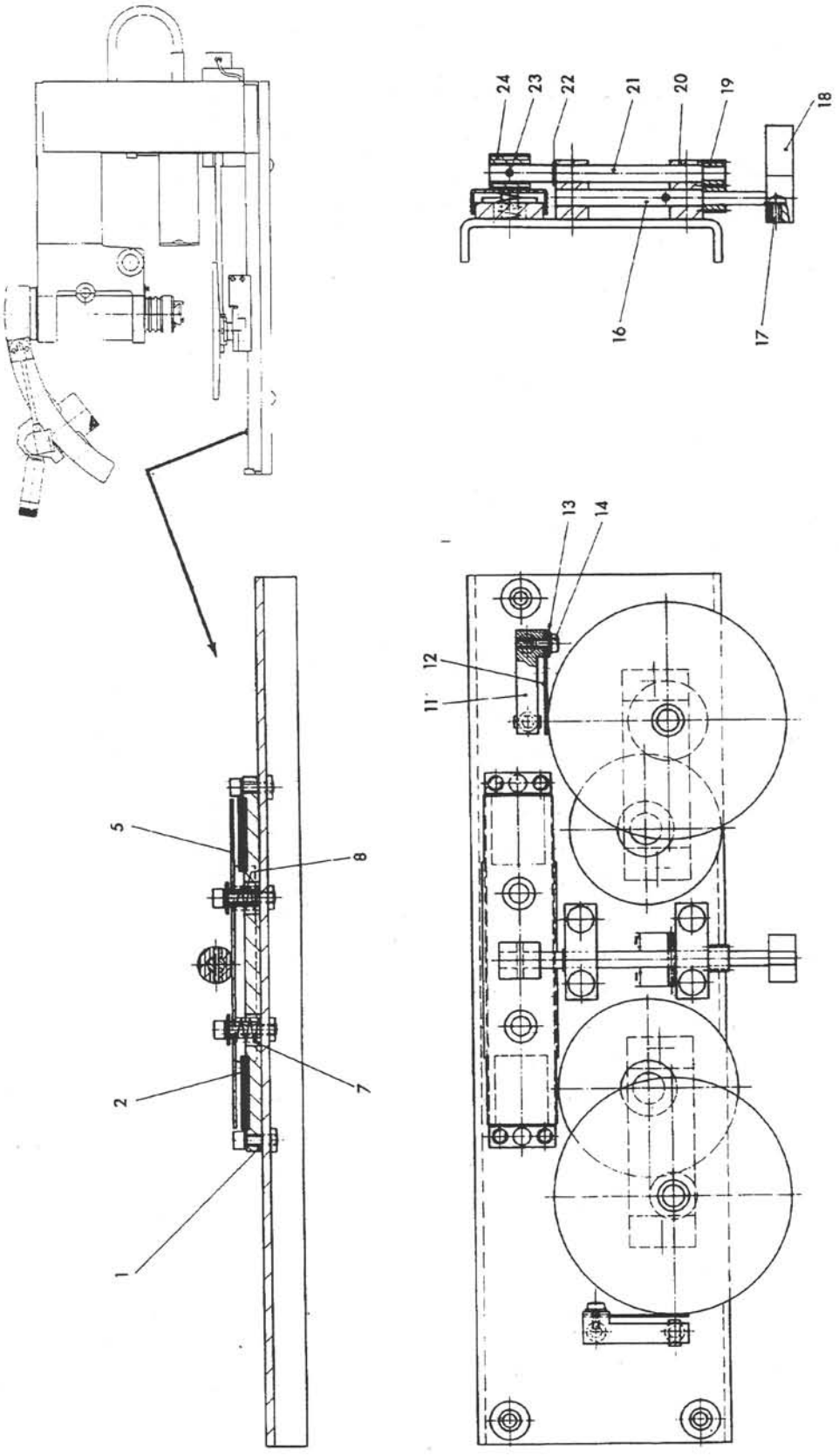

PARTS LIST:

1. BRAKE BASE, #22.00.138
2. RUBBER PAD, #22.00.139
5. CLAMP, #22.00.140
7. SPRING, #11.70.101
8. RING, #22.00.141
11. FRICTION SUPPORT, #22.00.157
12. FRICTION PAD, #22.00.158
13. PLATE, #22.00.159
14. SCREW, #10.21.170
16. SHAFT, #22.00.153
17. SCREW M4X6, #10.02.308
18. KNOB, #22.00.156
19. WHEEL, #22.00.155
20. BUSHING, #22.00.151
21. LOCKING SHAFT, #22.00.152
22. CLIP, #10.45.136
23. SET SCREW, #10.52.117
24. ECCENTRIC KNOB, #22.00.154

Vertical Movement and Theta Rotation

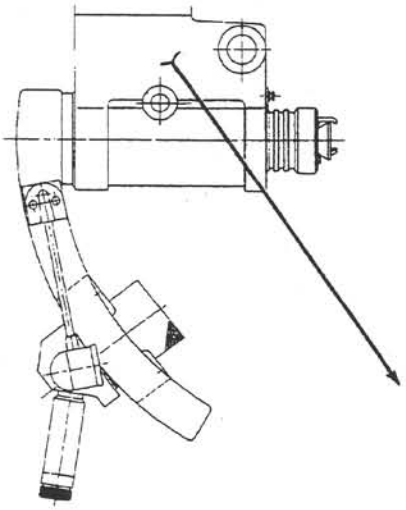

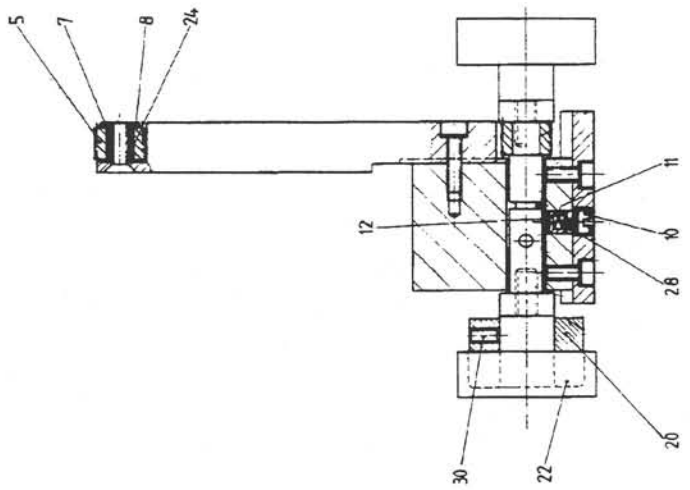

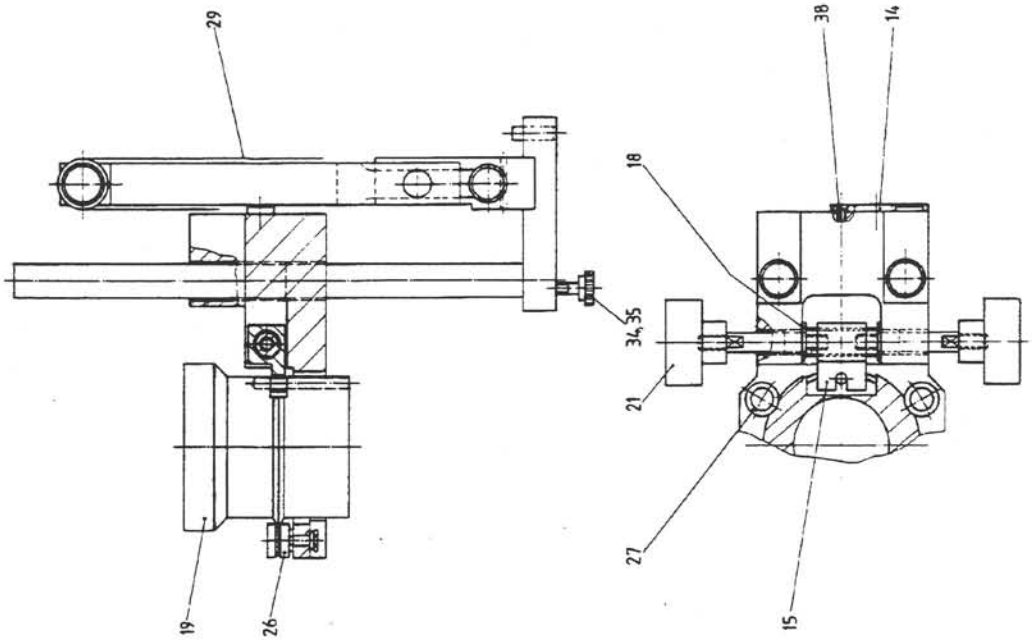

PARTS LIST:

4. SHAFT, #22.00.218
5. GEAR, #22.00.219
7. HUB, #22.00.222
8. WASHER, #22.00.223
10. PRESSURE SCREW, #22.00.228
11. BRAKE GUIDE, #22.00.229
12. BRAKE PAD, #22.00.230
14. CLAMP, #22.00.236
15. DRIVE BLOCK, #22.00.237
18. WASHER, #22.00.240
19. SUPPORT RING, #22.00.241
20. SCALE, #22.00.242
21. KNOB (rotation), #16.34.122
22. KNOB (height), #16.34.124
24. BUSHING, #11.20.100
26. GUIDE BUSHING, #11.22.103
27. GUIDE BUSHING, #11.22.104
28. SPRING, #11.70.138
29. BELT, #11.01.149
30. SET SCREW, #10.02.322
34. CAP, #10.31.178
35. STUD, #10.00.130

PARTS LIST:

2. SYSTEM PCB, #16.60.197
3. TEMP. CONTROLLER BOARD (upper heater), #16.60.191
4. TRANSFORMER 220V/24V, #16.40.127
5. TEMP. CONTROLLER BOARD (bottom heater), #16.60.191
10. 220 VOLT FUSE (10A) #16.42.114
12. RELAY #16.24.111
14. AC FILTER (20A), #16.45.102

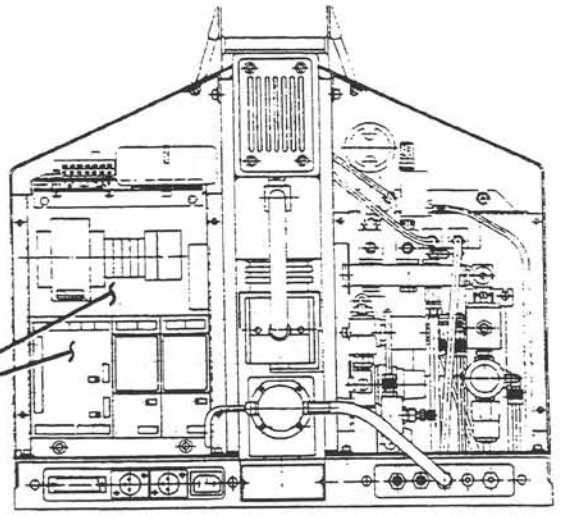

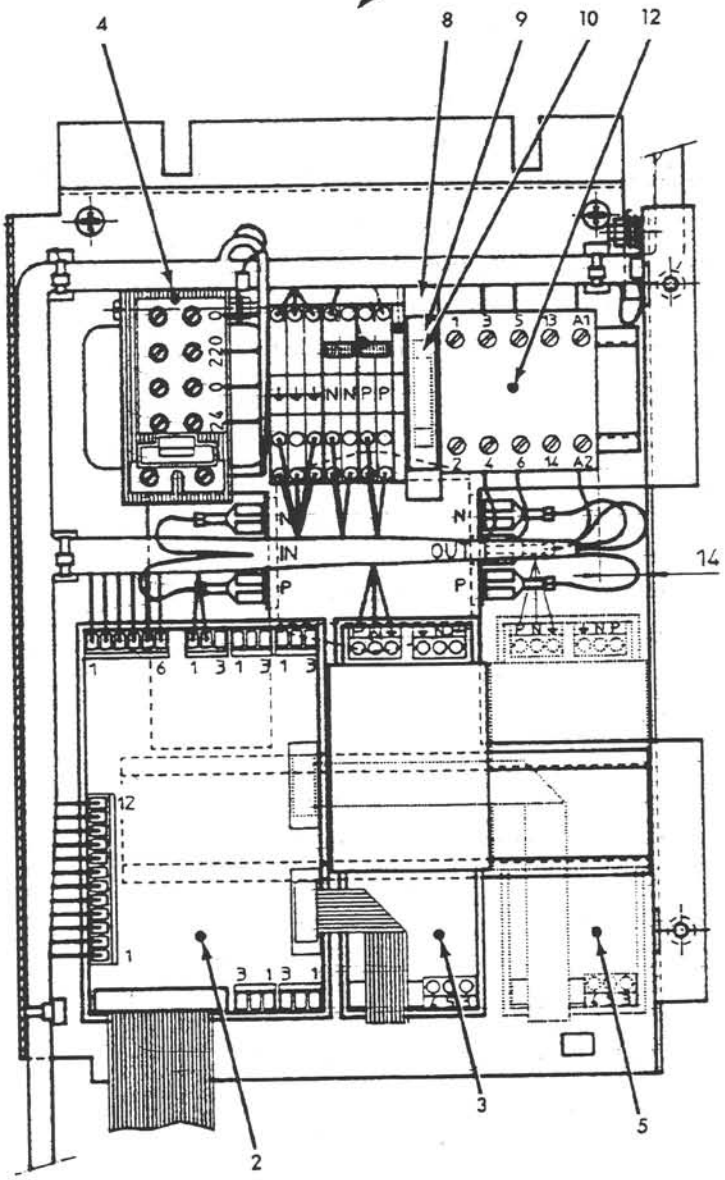

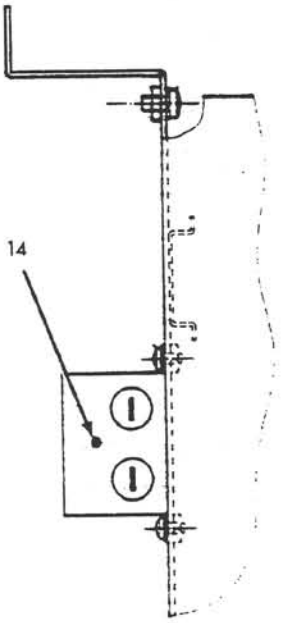

4-1-97

AIR-VAC TOOL KIT - DRS 22/26

17.A.17	1	-	TS5LL	SYRINGE
17.B.40	1	-	103ACA	TWEEZER
17.A.101	1	-	----------	CUP OF TOOL MAKERS GREASE
17.A.57	1	-	GNT-4	GAS NOZZLE TOOL
10.E.90	1	-	9005.03.025	3/32 BALL DRIVER
10.E.91	1	-	9005.03.026	7/64 BALL DRIVER
17.A.33	1	-	GNS-1	GAS NOZZLE STAND
1.B.	1	-	VCASST	VC ASSORTMENT
17.A.66	1	-	CT1	COMPONENT HANDLING TRAY
17.B.118	2	-	16.42.114	T10 AMP FUSE (diffuser and transformer)
17.B.117	1	-	16.42.106	T4 AMP FUSE (on board trasformer fuse)
13.D.102	1	-	9002.04.039	T1.25 AMP FUSE (ring transformer)
17.B.113	1	-		T1.0 AMP FUSE (transformer)
12.E.65	2	-	12875	AG15 AMP FUSE (main)
13.D.101	2	-	9002.04.018	AG10 AMP FUSE (main, software box only)
10.B.61	1	-	0100.01.131	AG .250 (diffuser control box)
17.B.120	1	-	16.42.126	T12.5 (power supply, DRS-26)
5.A.1	1	-	STB7	STB WIRE BRUSH
5.B.109	1	-	AS15	ANTI-SIEZE
11.D.38	1	-	12050	AMERICAN ALLEN SET
18.	1	-	9005.03.027	NOZZLE TUBE (calibration nozzle)
18.	1	-	9005.03.027	PLASTIC CASE (calibration plate)
10.A.3	4	-	0100.05.050	FREE STANDING BOARD SUPPORTS (DRS22)

(DRS-26 SUPPORTS WILL REPLACE DRS-22 SUPPORTS AS REQUIRED)

SUPPLEMENT TOOL KIT

ZT	1		48" OF 1/4 DIA. TUBE
ZT	1	19.30.145	6 pcs. ALLEN WRENCH SET 1.5 - 5 mm
ZT	1	GNT2	NOZZLE PIN THETA TOOL
ZT	1	19.37.100	LIGHT CAP EXTRACTOR TOOL
ZT	1	GNT-1	GAS NOZZLE TOOL
ZT	1	3CP-100	VACUUM PROBE
ZT	1	29A3	PROBE TIP
ZT	1	VC916N-3/16	VACUUM CUP
ZT	1	19.11.127	#5 SLOTTED SCREW DRIVER
ZT	1	19.11.115	PHILIPS SCREW DRIVER
ZT	2	14.00.15	12V 5W HALOGEN BULBS
ZT	2	16.32.101	SWITCH BULBS 28V
ZT	1	19.37.102	BULB EXTRACTOR TOOL
ZT	2		SWITCH SHROUDS (installed)

DIFFUSER CARRIER ASSEMBLY

Description	Qty.	Location	Part Number
1. Rail Shaft Front	1	10B49	0100.03.101
2. Rail Shaft Rear	1	10B53	0100.03.102
3. Corner Support Segment	2	10E85	0110.03.129
4. Small Board Lock Assembly	2		
5. X-Axis Bearing Plate	1	10A113	0100.03.110
6. Bearing Adj. Screw 6-32-1/4 Set Screw	2	11A	
7. Screw 8-32 x 1/2" Socket	3	41A	
8. X-Bearing Adj. Plate	1	10B70	0100.03.124
9. Bearing Block Assembly	4	10C117	0100.03.045
10. DRS26 Rail Spacer Block	4	10D110	0103.03.108
11. Screw 8-32 x 1/2" Socket	4	41A	
12. Board Support Sub Assembly	6		
13. Board Support Rail	2	10B97	0100.03.105
14. DRS26 Spacer Board Support	4	10D94	0103.05.104
15. Support Bracket	4	10B65	0100.05.101
16. Spring Board Clamp	4	12E104	12374
17. Spacer (Spring)	4	10A109	0100.65.102
18. Screw 6-32 x 1/2 Flat	4	100A	
19. Screw 4-40 x 5/8 Socket	8	107A	
20. Screw 8-32 x 5/8 Socket	4	42B	
21. Rail Support	2	10B101	0100.03.106
22. Screw 6-32 x 3/8 Flat	3	69A	
23. Carrier Level Plate	2	10B69	0100.03.123
24. Hinge Latch Bushing	4	10B66	0100.03.109
25. Hinge Support Latch	2	10B68	0100.03.108
26. Rail Hinge Assembly	2		
27. Thrust Bronze Bearing	2	10B67	0100.03.120
28. Screw 4-40 x 3/4 Flat	2	17A	
29. Nut 4-40 Hex	2	18B	

(26) RAIL HINGE ASSEMBLY

Description	Qty.	Location	Part Number
1. Screw 10-32 x 1" Socket	2	26A	
2. Rail Hinge	1	10B105	0100.03.107
3. Set Screw Cone Point	2	10E57	9000.10.000
4. Screw 4-40 x 3/8 Button	1	95B	
5. Bevel Washer	1	10A110	0100.03.121
6. Swivel Clamp	1	10A111	0100.03.122
7. Flanged Bronze Bearing	1	10B74	0100.03.111

(12) BOARD SUPPORT ASSEMBLY

Description	Qty.	Location	Part Number
1. Board Lock Knob Assembly	1	10B79	0100.03.043
2. Rail Clamp	1	10B58	0100.03.114
3. Washer #8 SAE	1	45A	
4. Spring	1	12E104	12374
5A. Large Support	1	10D86	0110.03.127
5B. Small Support	1	10D85	0100.03.128

(9) BEARING BLOCK ASSEMBLY

Description	Qty.	Location	Part Number
1. Lock Knob Assembly	1	10D89	0110.03.046
2. Bearing Block	1	10C113	0100.03.103
3. Roll Pin	2		
4. Linear Ball Bearing	2	10B59	0100.03.119
5. Wave Spring	1	10D90	9005.02.001
6. Locking Ring	1	10D91	0110.03.104
7. Screw 6-32 x 1/4 Button	2	1B	

DIFFUSER CARRIER ASSEMBLY VIEW

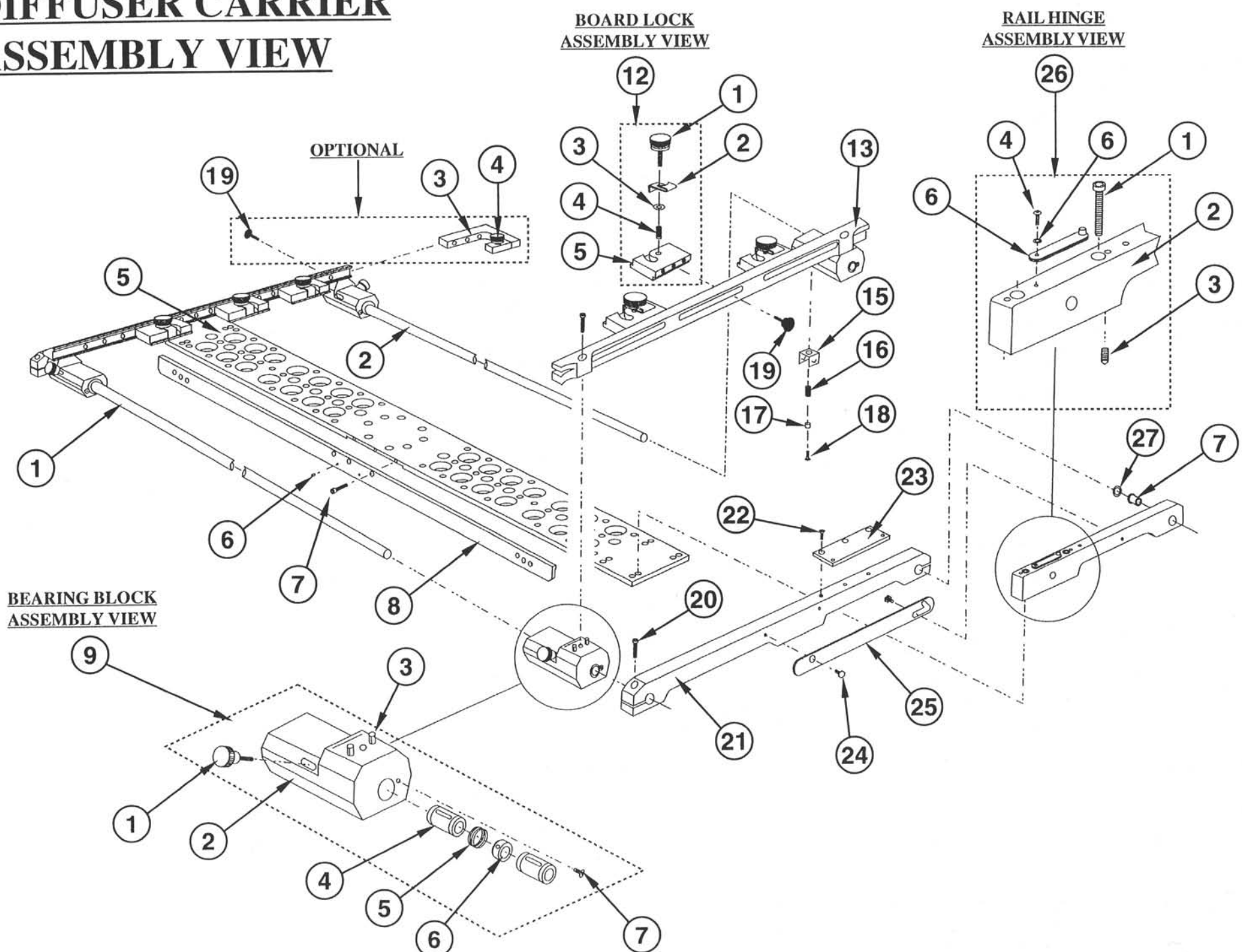

CARRIER VIEW A

A- Bearing Adjust Plate
1- Cover Screws (3)
2- Bearing Mount Screws (4)
3R-Rear Bearing Block
3F-Front Bearing Block
7- Leveling Screws (4)
8- Mounting Screws (4)

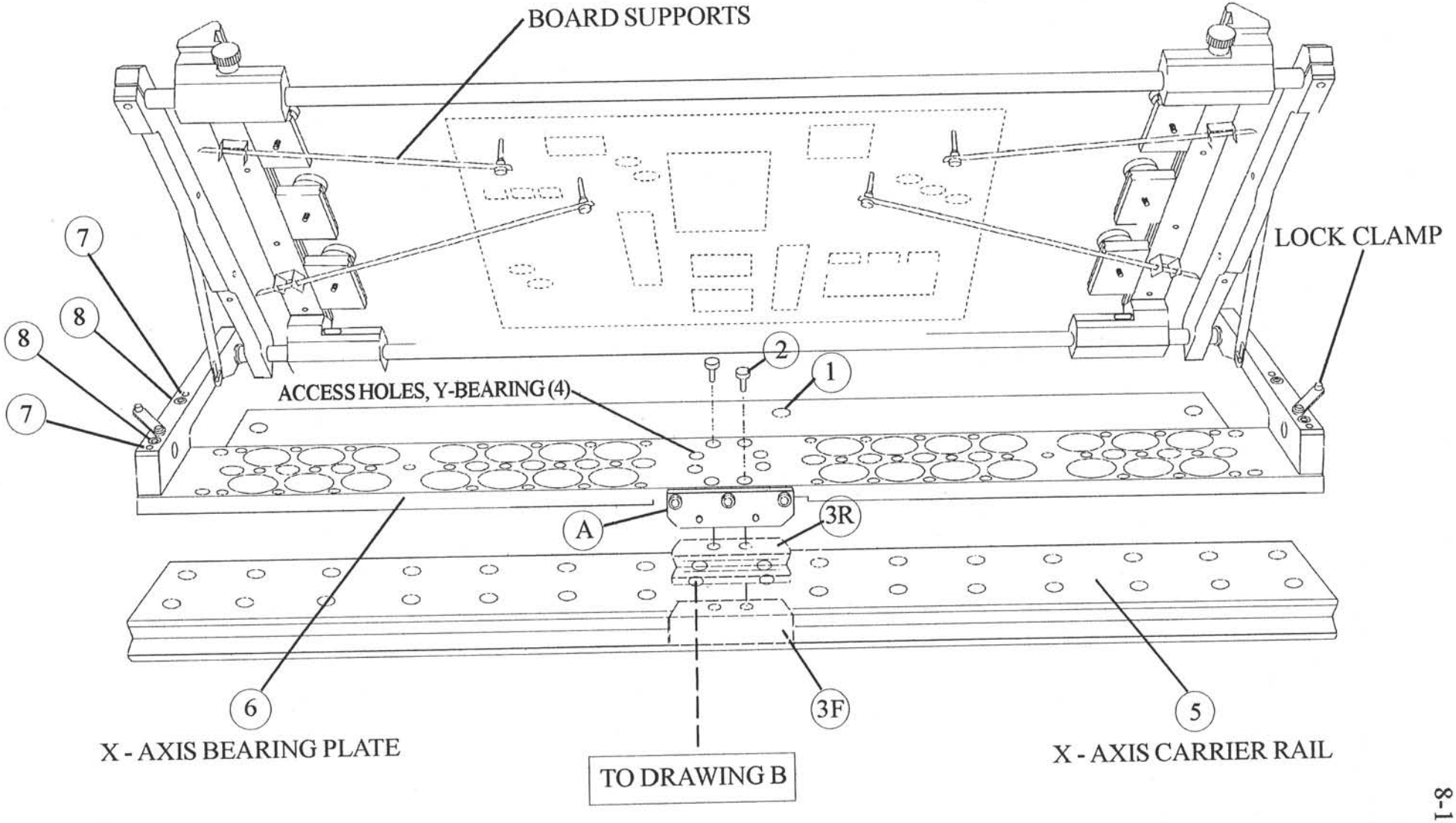

Y - AXIS VIEW B

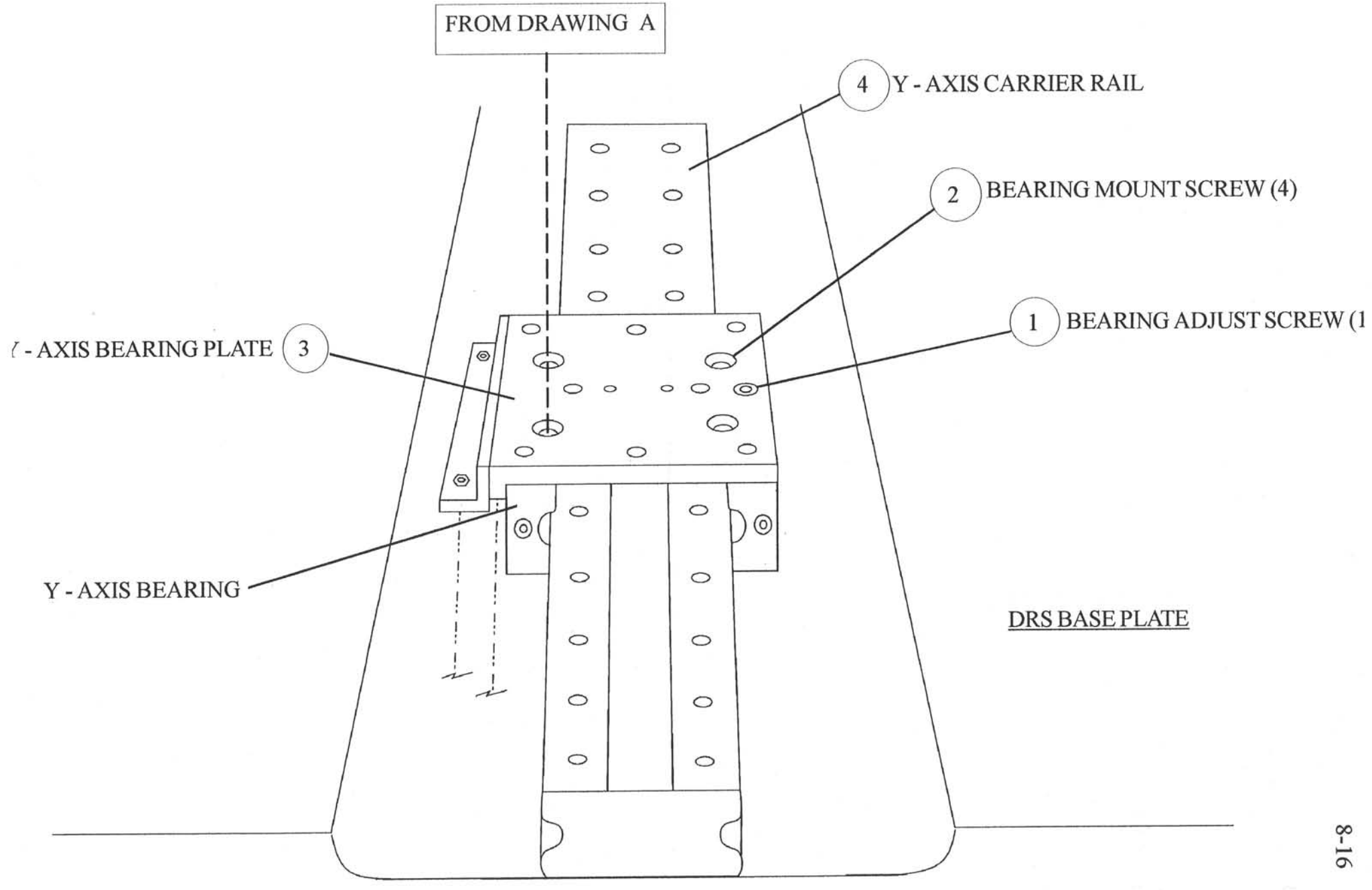
FROM DRAWING A
4
Y - AXIS CARRIER RAIL
2
BEARING MOUNT SCREW (4)
1
BEARING ADJUST SCREW (1
- AXIS BEARING PLATE
3
Y - AXIS BEARING
DRS BASE PLATE

DIFFUSER PLATE VIEW C

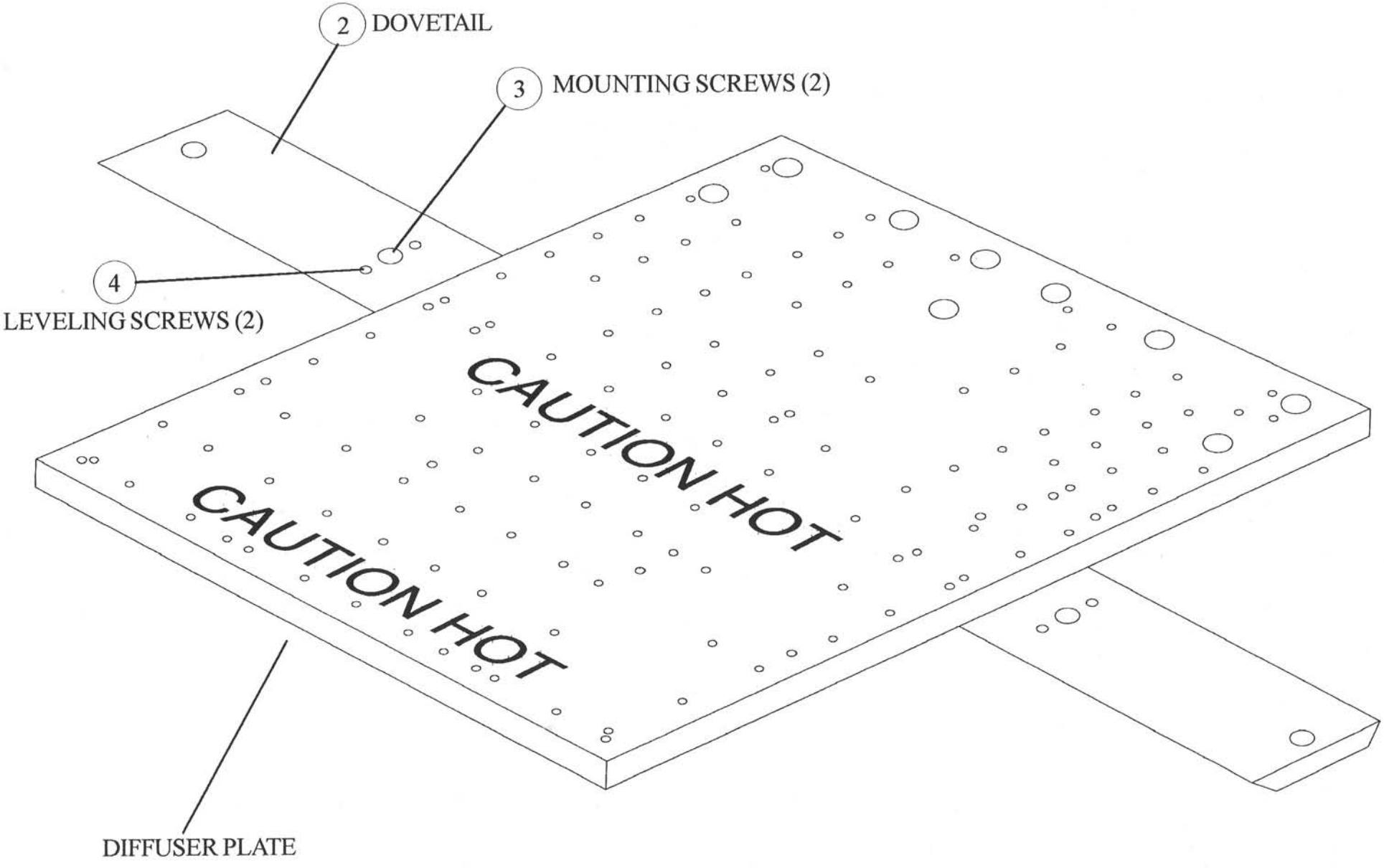

DIFFUSER PLATE ASSEMBLY
DRAWING VIEW D

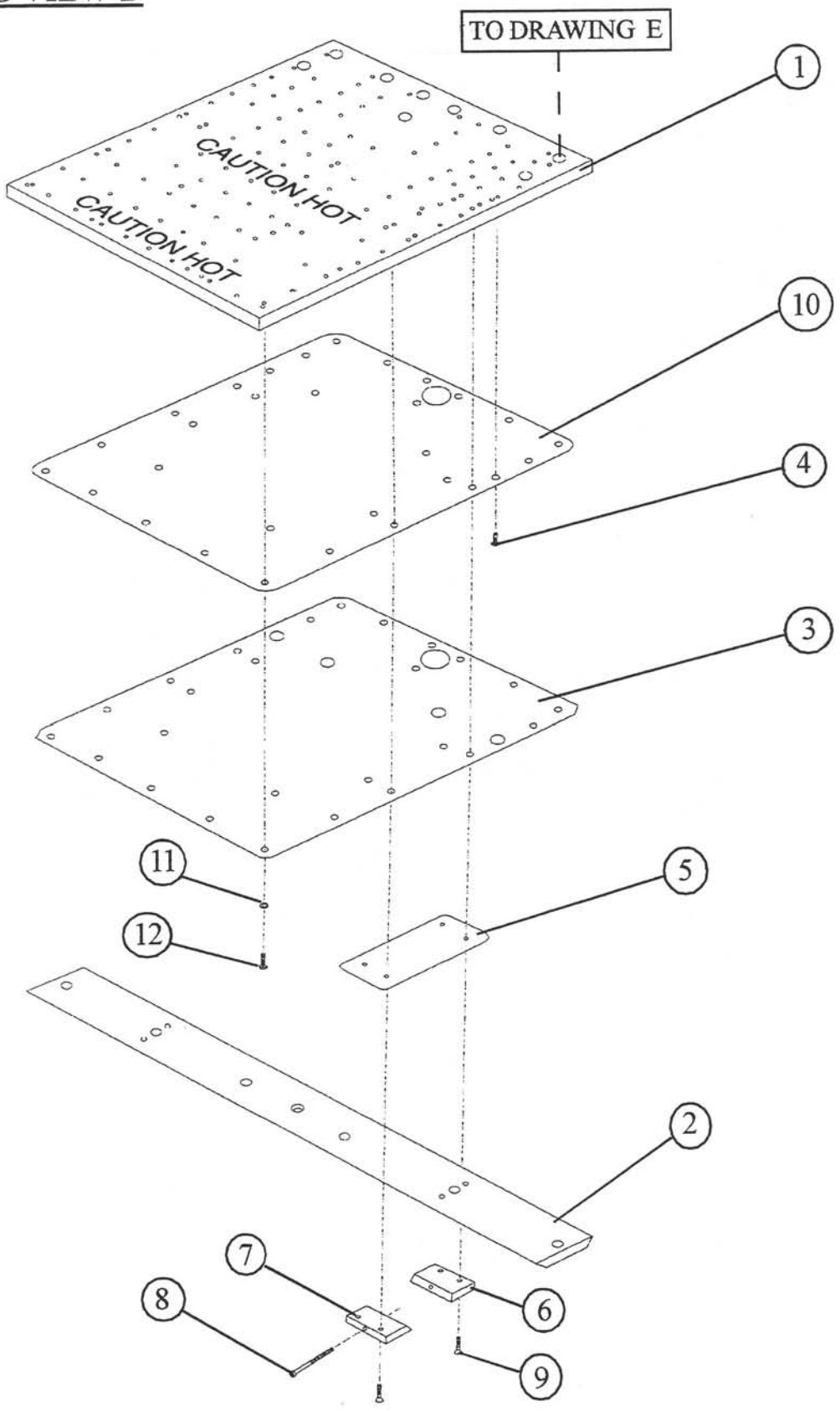

DIFFUSER PLATE ASSEMBLY

DESCRIPTION	QTY.	LOCATION	PART NUMBER
1. Top Plate	1	10.A.17	0100.01.101
2. Dove Tail	1	10.D.121	0103.03.107
3. Bottom Plate	1	10.A.21	0100.01.102
4. Pan Head	13		4-40 x 3/16
5. Bottom Plate Spacer	2	10.E.69	0100.01.140
6. Dove Tail Bracket, Rear	2	10.A.34	0100.01.105
7. Dove Tail Bracket, Front	2	10.A.33	0100.01.104
8. 6-32 x 2.0 SHC	2		
9. 4-40 x 1/2 Flat Head	8		
10. Insulator Plate	1	10.A.25	0100.01.103
11. 4-40 x 1/4 Pan Head	4		
12. #4 Star Washer	4		

HEATER BLOCK ASSEMBLY
DRAWING VIEW E

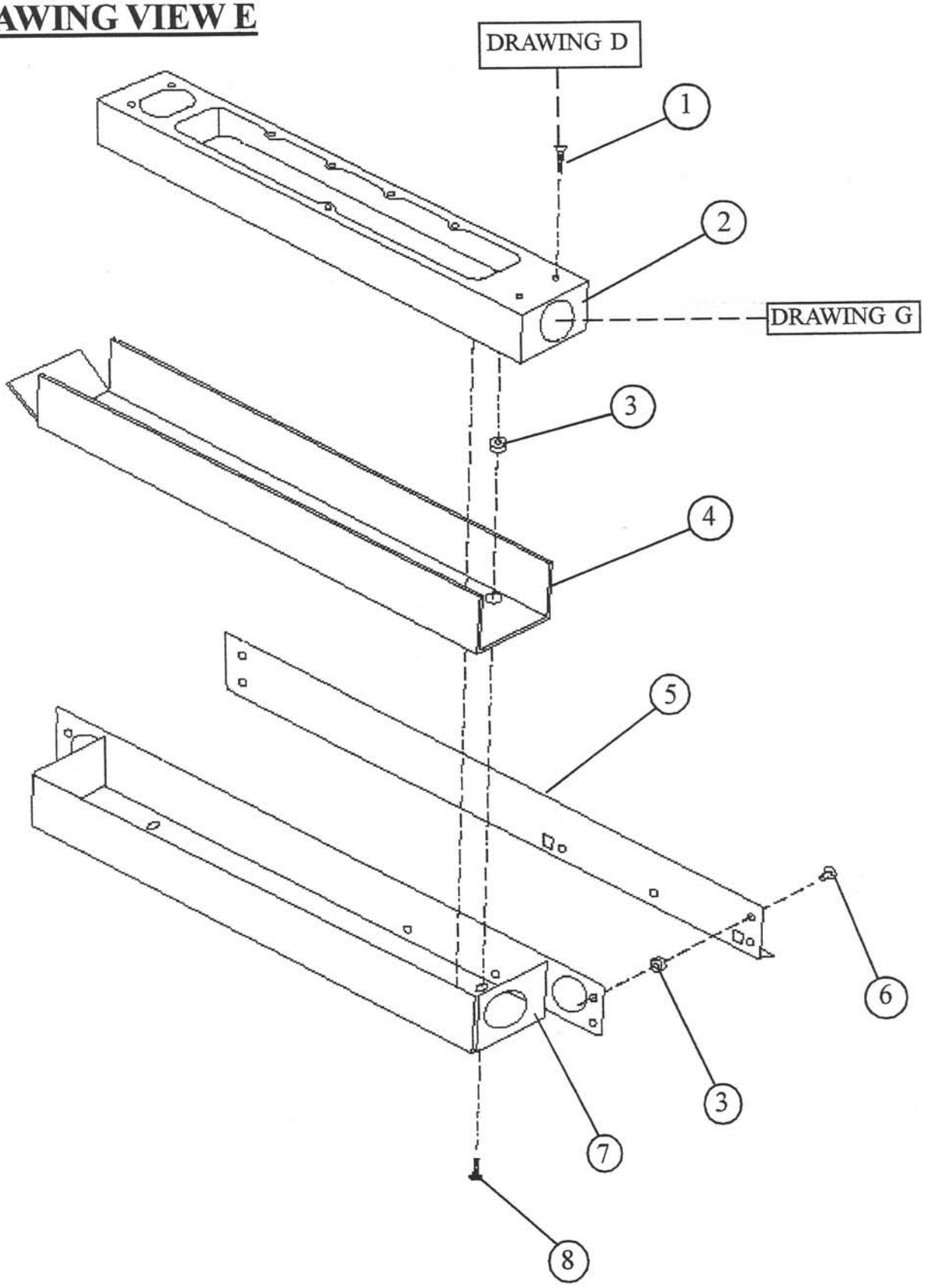

HEATER BLOCK ASSEMBLY

Description	Qty.	Location	Part Number
1. 6-32 x 5/8 Flat Head	9		
2. Heater Block	1	10.A.45	0100.01.106
3. Spacer	10	10.A.50	1000.00.106
4. Insulation	1	10.A.73	0100.01.115
5. Cable Heat Shield	1	10.A.49	0100.01.108
6. Rivet	6		
7. Heater Heaet Shield	1	10.A.53	0100.01.107
8. 6-32 x 3/8 Pan Head	4		

HEATER BLOCK ELECTRICAL AND HEATER ASSEMBLY DRAWING VIEW G

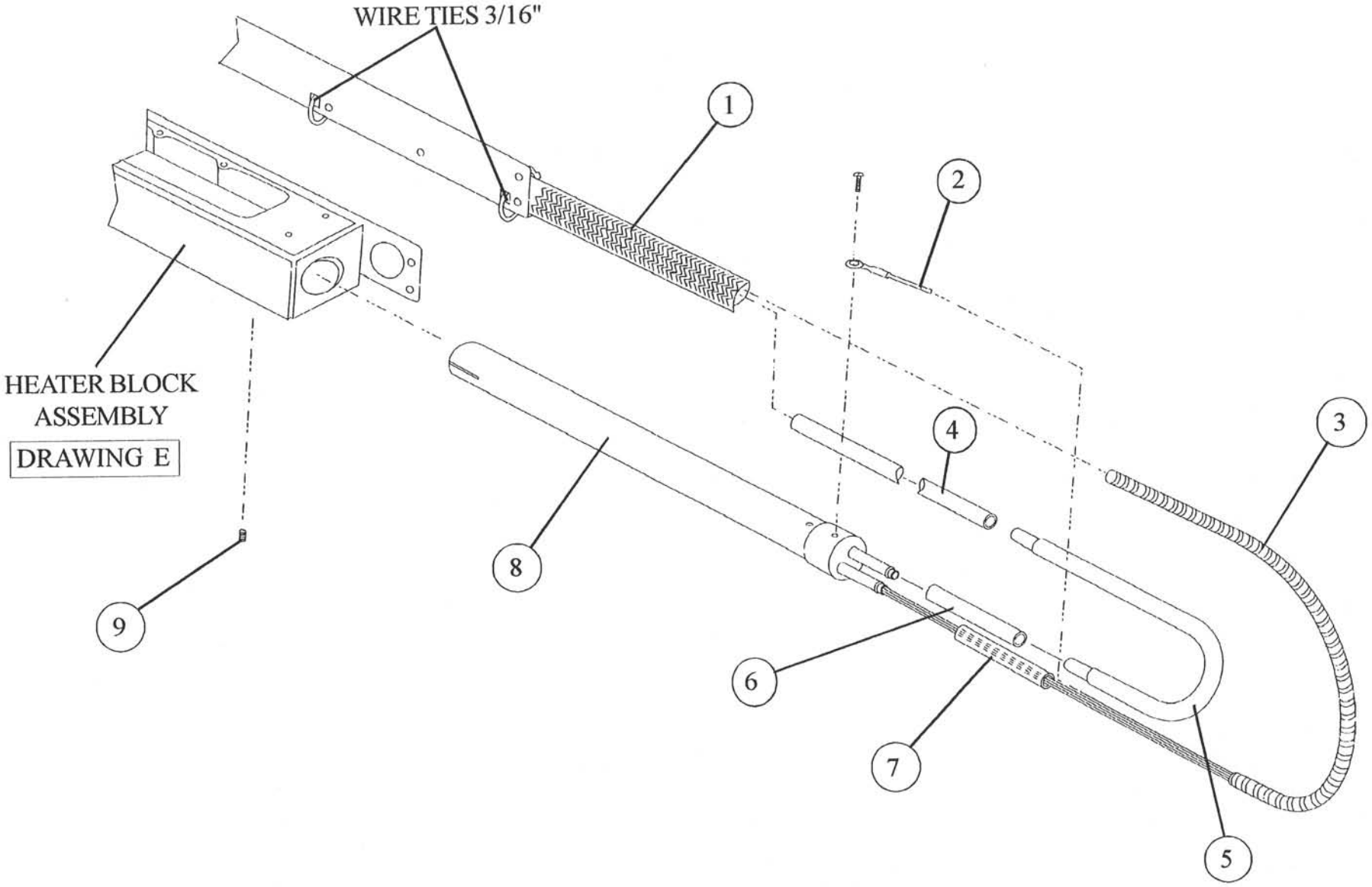

HEATER BLOCK ELECTRICAL & AIR ASSEMBLY

DESCRIPTION	QTY.	LOCATION	PART NUMBER
1. Wire Sheathing _____	52"	13.C.5	9002.00.064
2. Ground Wire 18 awg, green ____	81"	_____	_____
3. Stainless Steel Conduit	57"	10.C.9	0100.01.117
4. Clear Tube	29"	16C17	TC3-14
5. Air Tube, Front	1	10.A.66	0100.01.110
6. Clear Tube	2.5"	16C17	TC3-14
7. 3/8 x Shrink Tube	1.5"	_____	_____
8. 2000 Watt Heater	1	10.E.49	0100.01.120
9. 6-32 x 1/4 set screw	1	_____	_____

DOUBLE DIFFUSER

Cover, Internal Control Box - Assembled View

0101.02.043

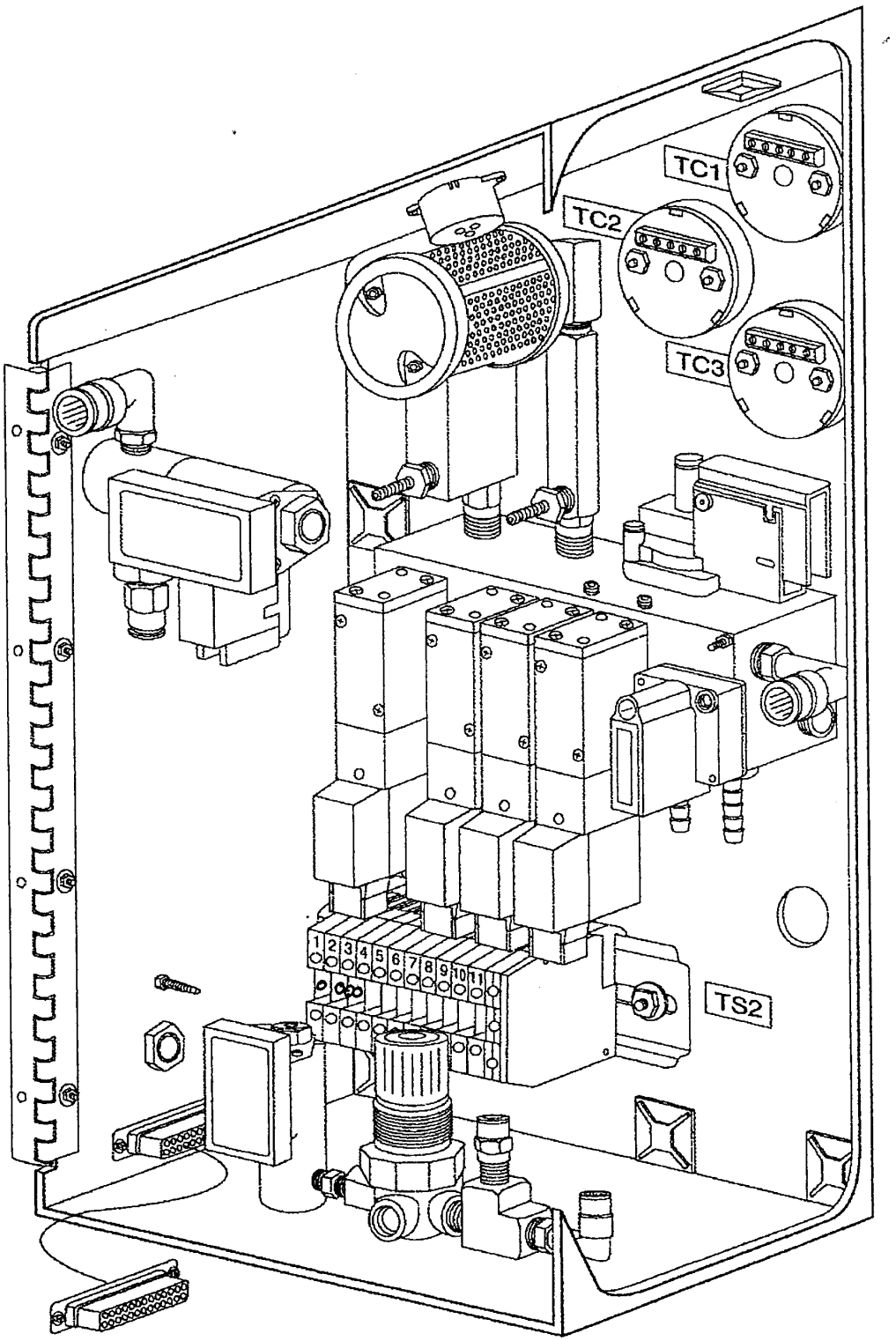

DOUBLE DIFFUSER

Cover, Internal Control Box - Exploded View - 0101.02.043

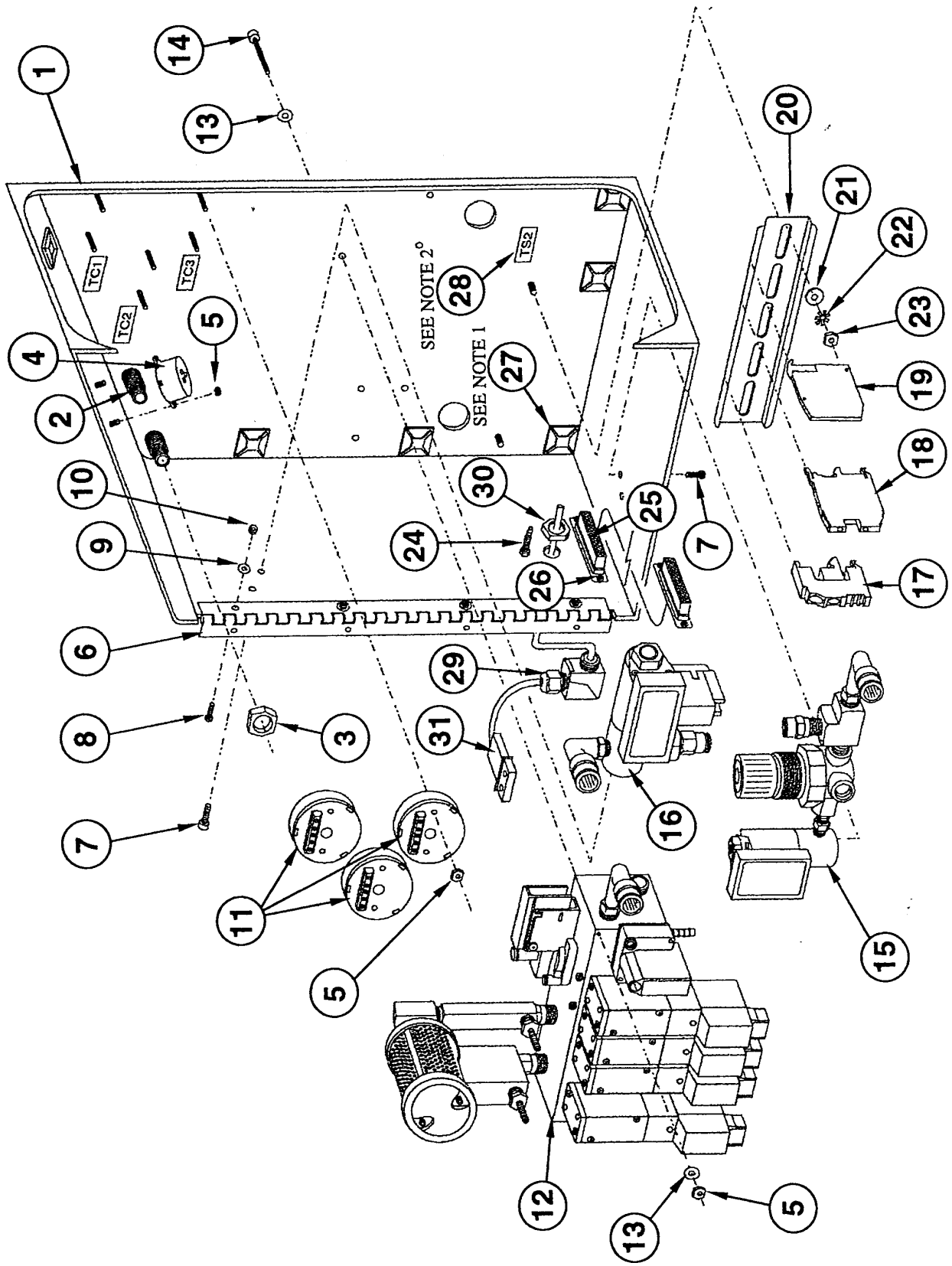

DOUBLE DIFFUSER

Cover, Internal Control Box - Parts List

	Description	Qty.	Location	Part Number
1.	Cover	1	10Z21	0101.02.107
2.	Bulkhead Fitting	2	11A58	12710
3.	Nut, Bulkhead Fitting	2	11A57	12710-1
4.	Buzzer	1	16D37	TC3-28
5.	Nut, 6-32	10	_____	_____
6.	Hinge 12”	1	10E27	0101.02.105
7.	Screw, 8-32 x 1/4” SHC	6	_____	_____
8.	Screw, 6-32 x 3/8” Low Head	4	_____	_____
9.	Washer #8, SAE	4	_____	_____
10.	Nut, 8-32	4	_____	_____
11.	Thermocouple Channels	3	16D81	TC3-02
12.	Manifold Assembly	1	10E37	0101.02.040
13.	Washer #6 SAE	2	_____	_____
14.	Screw, 6-32 x 2.0 SHC	2	_____	_____
15.	PCOOL Pneumatics Assembly	1	N/A	N/A
16.	Nozzle Pneumatics Assembly	1	10E82	0101.02.041
17.	End Tab	1	8A56	9002.03.004
18.	Terminal Blocks	11	8A53	9002.03.000
19.	Ground Block	1	8A54	9002.03.001
20.	Din Rail 4 3/4”	1	10Z19	0101.02.102
21.	Washer #10 SAE	2	_____	_____
22.	Washer #10 External Star	2	_____	_____
23.	Nut, 10-32	2	_____	_____
24.	Bulkhead, Barb Fitting	1	New	9001.00.050
25.	Harness	1	16D33	TC3-30A
26.	Hardware, D-Sub	2	16D94	TC3-33
27.	Wire Tie Mounts	6	_____	_____
28.	Labels	-	_____	_____
29.	90 Degree Strain Relief	1	10E65	9002.02.003
30.	Strain Relief Nut	1	10E66	9002.02.004
31.	9-Pin Cable	1	10C125	0100.01.132

NOTES: Refer To Drawing

1. Place wire tie mounts as shown.

2. Make labels and place as shown.

DRS22

PCOOL Pneumatics - Sub Assembly

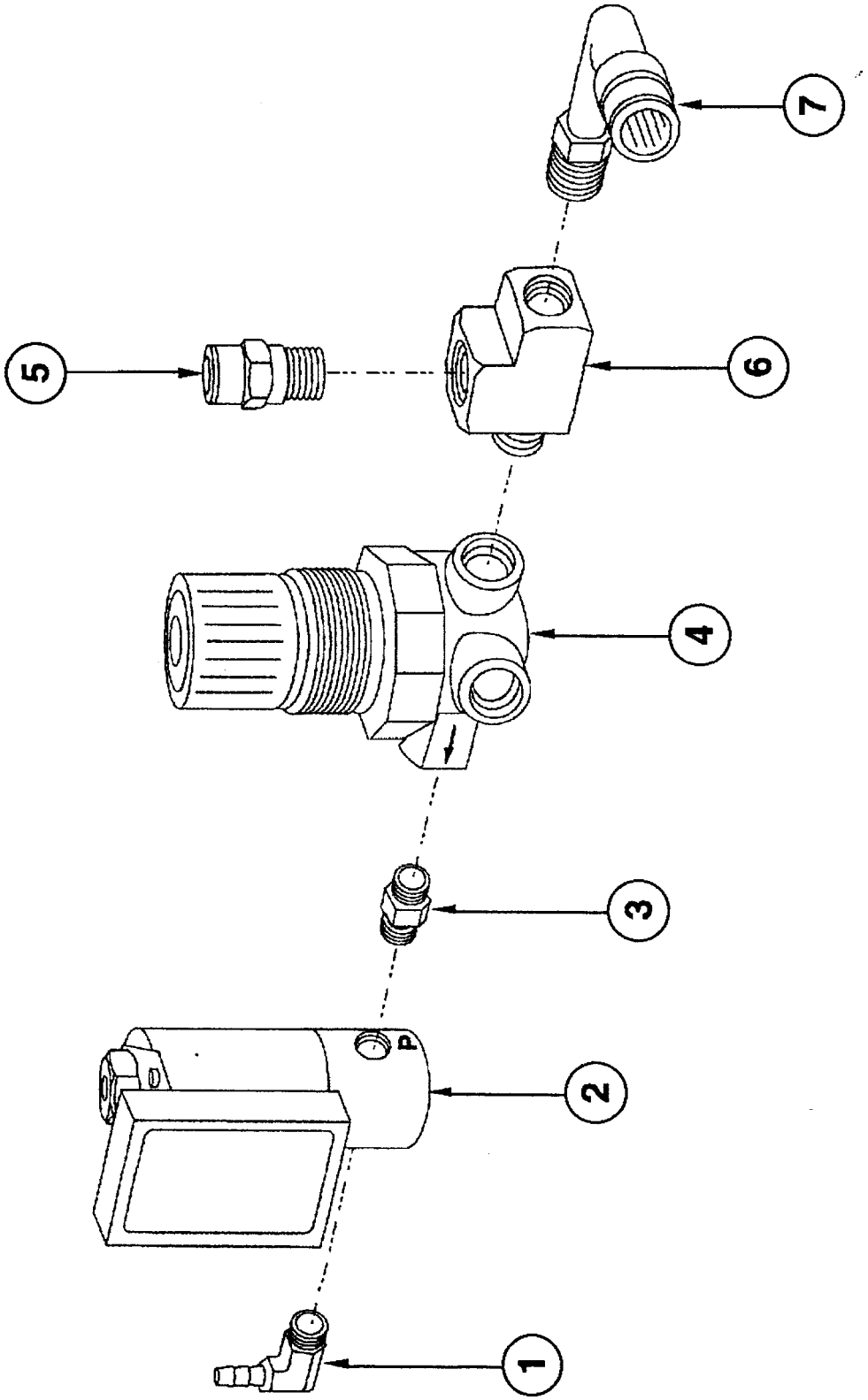

DRS22

PCOOL Pneumatics - Parts List

	Description	Qty.	Location	Part Number
1.	1/8" NPT - 1/8" Barb Elbow	1	TC3-25	16D79
2.	Proportional Valve	1	TC3-05	16D121
3.	1/8" NPT Hex Nipple	1	TC3-23	16D80
4.	Air Regulator	1	TC3-04	16C105
5.	1/8" NPT - 3/8" Plug-In	1	New	N/A
6.	1/8" NPT Street-T	1	TC3-21	16D76
7.	1/8" - 3/8" Plug-In Swivel Elbow	1	16C42	N/A

DRS22 & DOUBLE DIFFUSER

Vacuum Filter - Sub Assembly - 1002.00.010

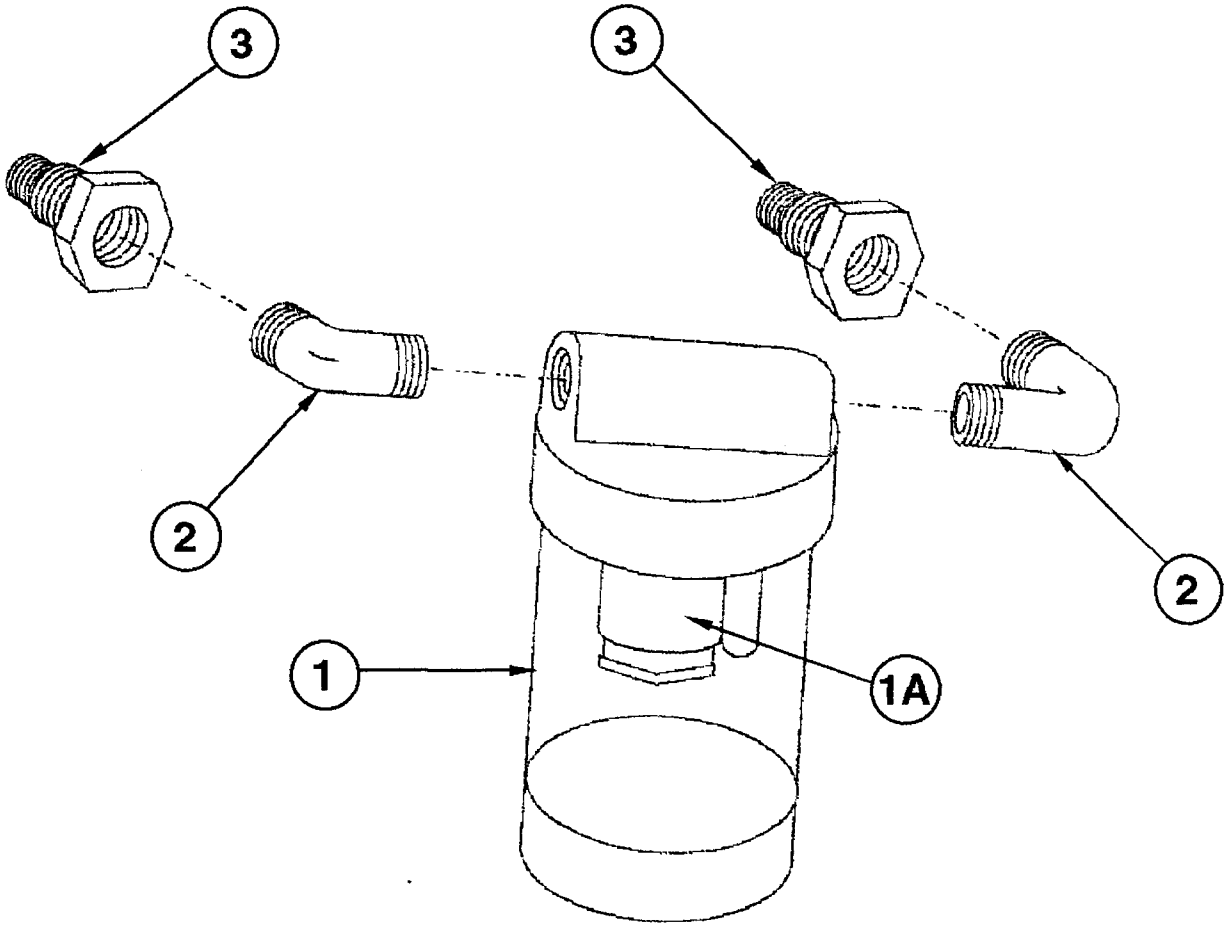

DRS22 & DOUBLE DIFFUSER

Vacuum Filter - Sub Assembly - Parts List

	Description	Qty.	Location	Part Number
1.	Glass Jar Filter	1	5D5	F1-A
1A.	- Filter, Felt	_	_____	F1AE
2.	Male Elbow, 1/8" NPT	2	17A99	9001.00.009
3.	Bulkhead Fitting	2	11A58	12710

DOUBLE DIFFUSER

Frame Chassis - Assembled View - 0101.02.042

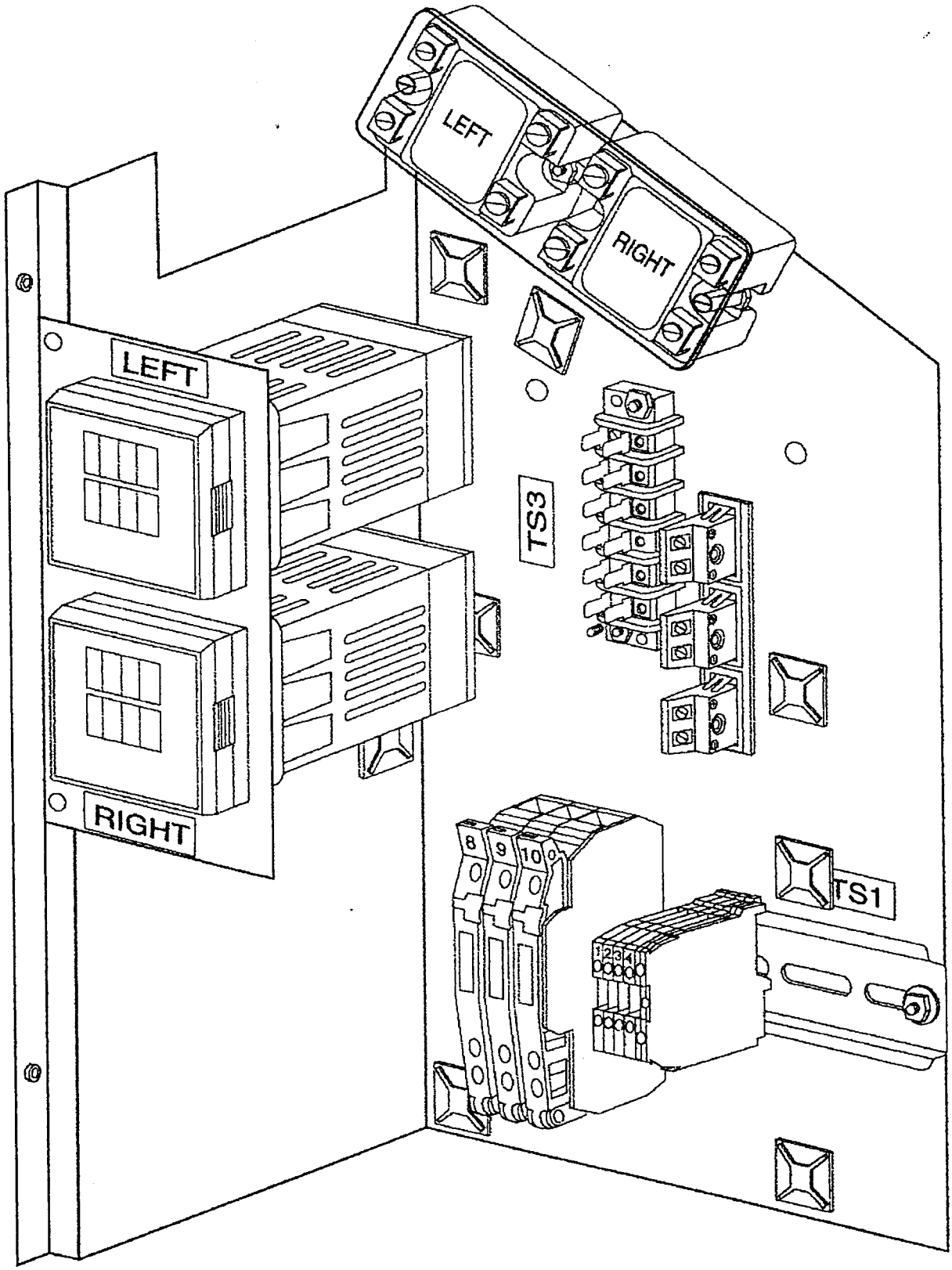

DOUBLE DIFFUSER

Frame Chassis - Exploded View - 0101.02.042

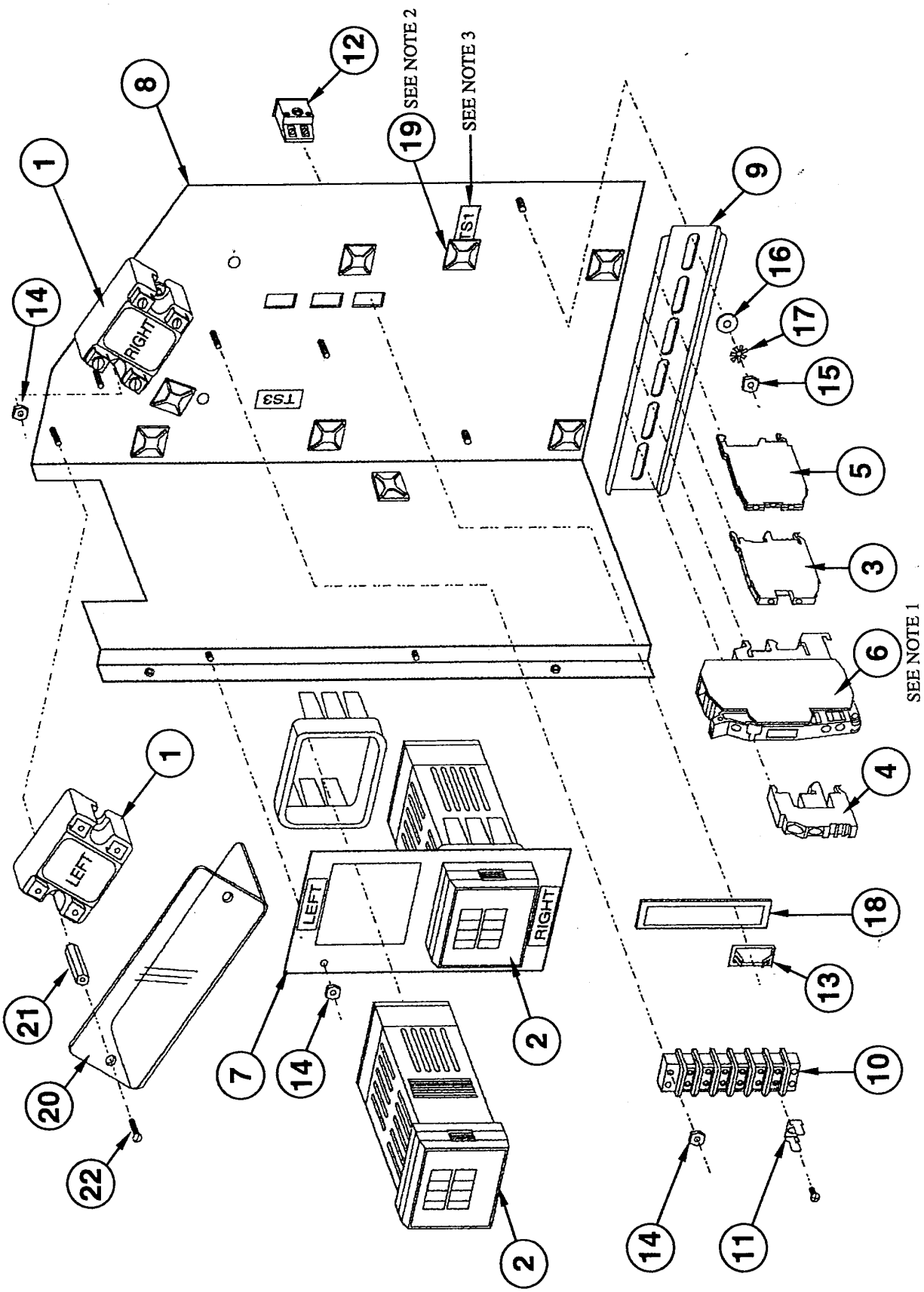

DOUBLE DIFFUSER

Frame Chassis - Parts List - 0101.02.042

	Description	Qty.	Location	Part Number
1.	CR3 Solid State Relay	2	16E61	9002.06.003
2.	Athena 02 Temperature Control (30AX)	2	10A105	0100.01.127
3.	Terminal Blocks	4	8A53	9002.03.000
4.	End Tab	1	8A56	9002.03.002
5.	Ground Block	1	8A54	9002.03.001
6.	Fuse Blocks	5	8A65	9002.04.002
7.	Mounting Plate (temp. controller)	1	10E8	0101.02.109
8.	Frame	1	10E130	0101.02.104
9.	Din Rail	1	10E89	0101.02.103
10.	Terminal Strip	1	6B54	DVM042
11.	Male "U" Spades	6	N/A	10M151
12.	Thermocouple Jacks	3	16D95	TC3-07
13.	Thermocouple Clips	3	16D96	TC3-07-2
14.	Nut #6-32	8	_____	_____
15.	Nut #10-32	2	_____	_____
16.	Washer #10 SAE	2	_____	_____
17.	Washer #10 External Star	2	_____	_____
18.	Thermocouple Gasket	1	N/A	0101.02.110
19.	Wire Tie Mounts	8	_____	_____
20.	Cover	1	10E70	0101.02.111
21.	Standoff, 6-32 x 7/8"	2	10E5	9000.10.103
22.	Screw, 6-32 x 3/8" Pan Head	2	_____	_____

NOTES: Refer To Drawing

1. Fuse #8 is 1/4 amp, fuses #9 & #10 are 10 amp.
2. Place wire tie mounts as shown.
3. Place various labels as shown.

DRS DIFFUSER

Carrier - View A

A- Bearing Adjust Plate
1- Cover Screws (3)
2- Bearing Mount Screws (4)
3R-Rear Bearing Block
3F-Front Bearing Block
7- Leveling Screws (4)
8- Mounting Screws (4)

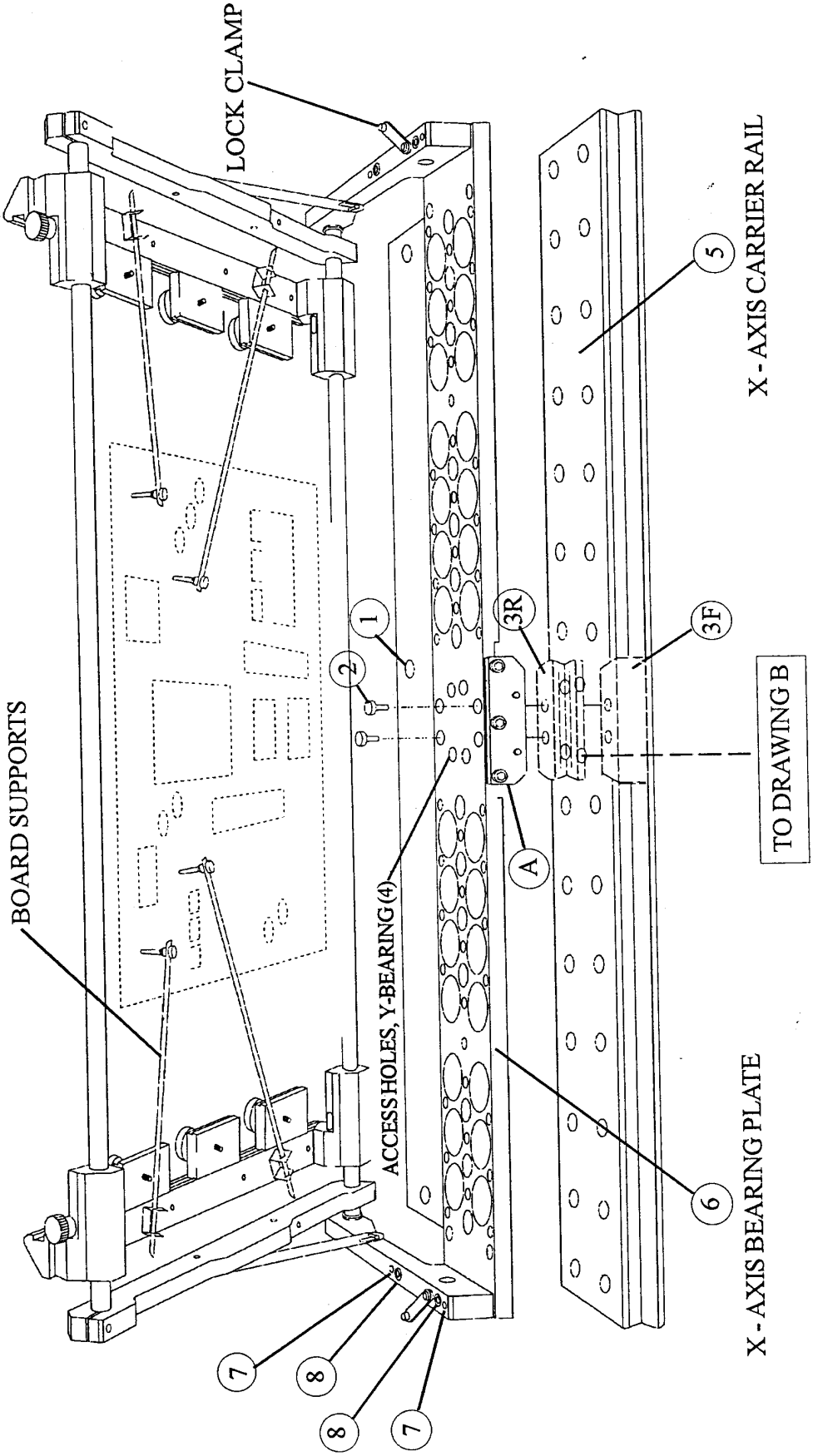

DRS DIFFUSER

Y-Axis - View B

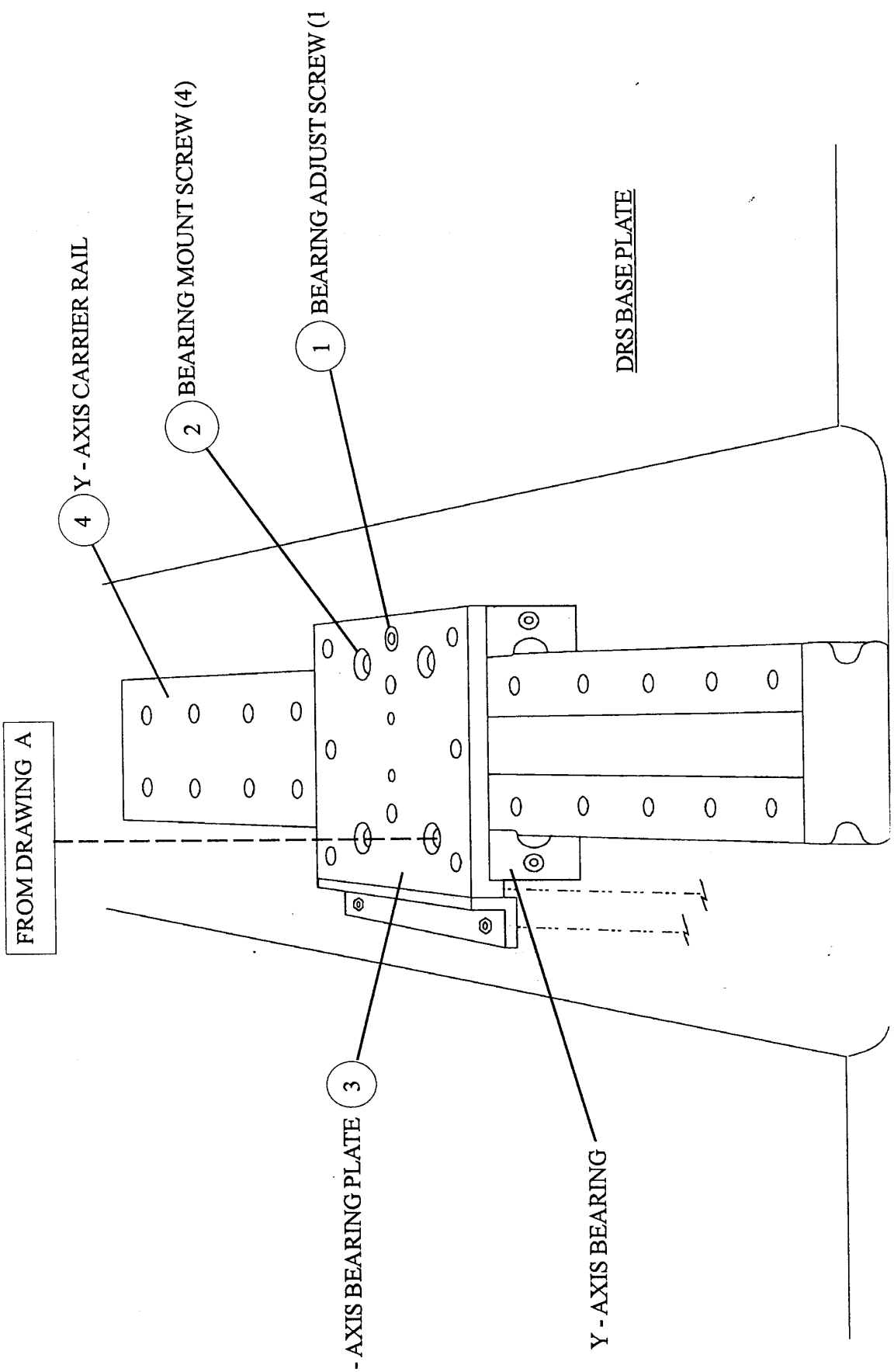

DOUBLE DIFFUSER

Nozzle Valve - Sub-Assembly - 0101.02.041

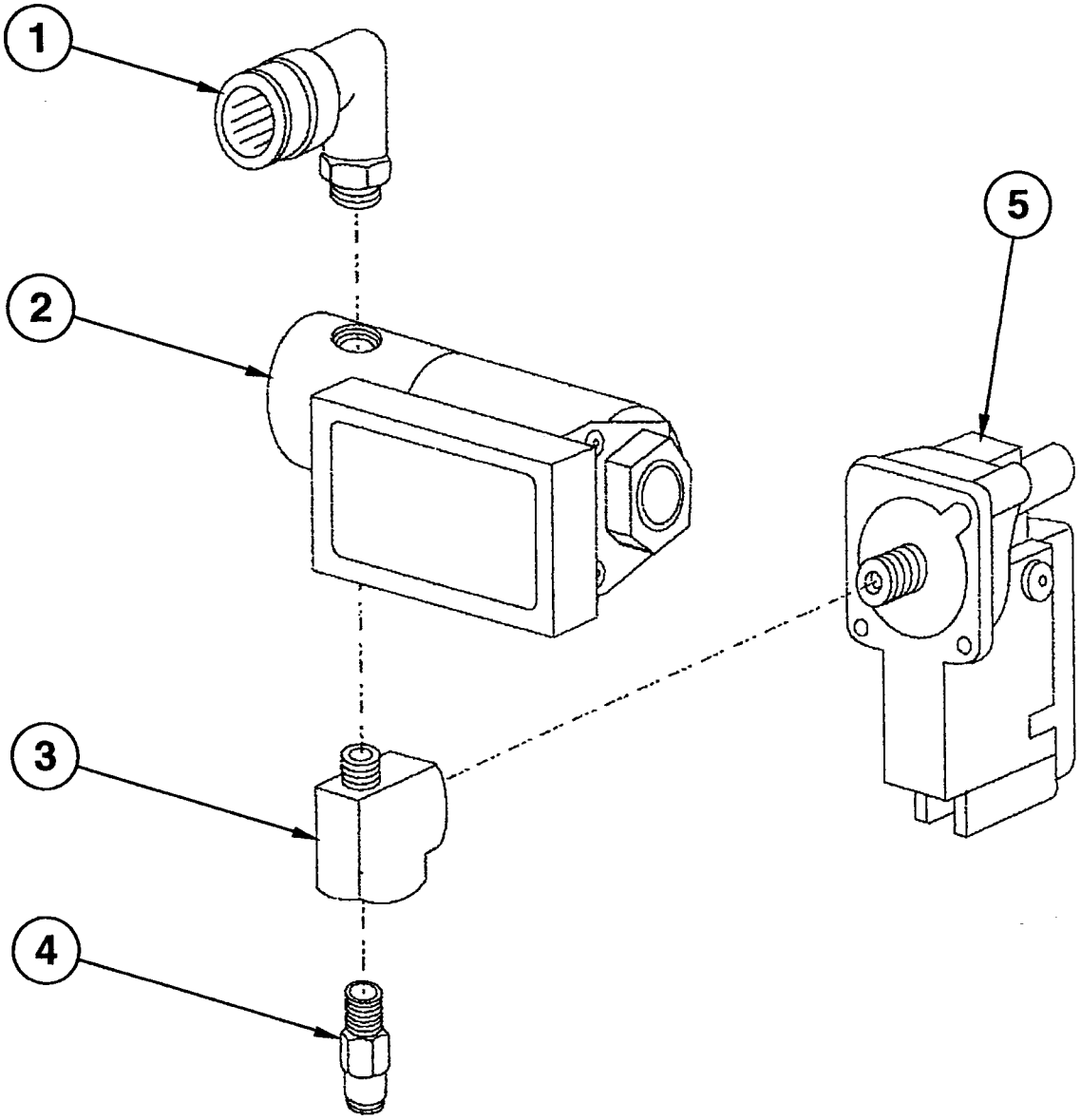

DOUBLE DIFFUSER

Nozzle Valve - Parts List - 0101.02.041

	Description	Qty.	Location	Part Number
1.	1/8” to 3/8” Plug In Swivel Elbow	1	16C42	9001.00.029
2.	Proportional Valve	1	TC3-05	16D121
3.	1/8” NPT Street-T	1	TC3-21	16D76
4.	1/8” NPT Plug In Fitting	1	FLX335	14A93
5.	Low Pressure Switch	1	16D29	TC3-03

DOUBLE DIFFUSER

Manifold - Exploded View

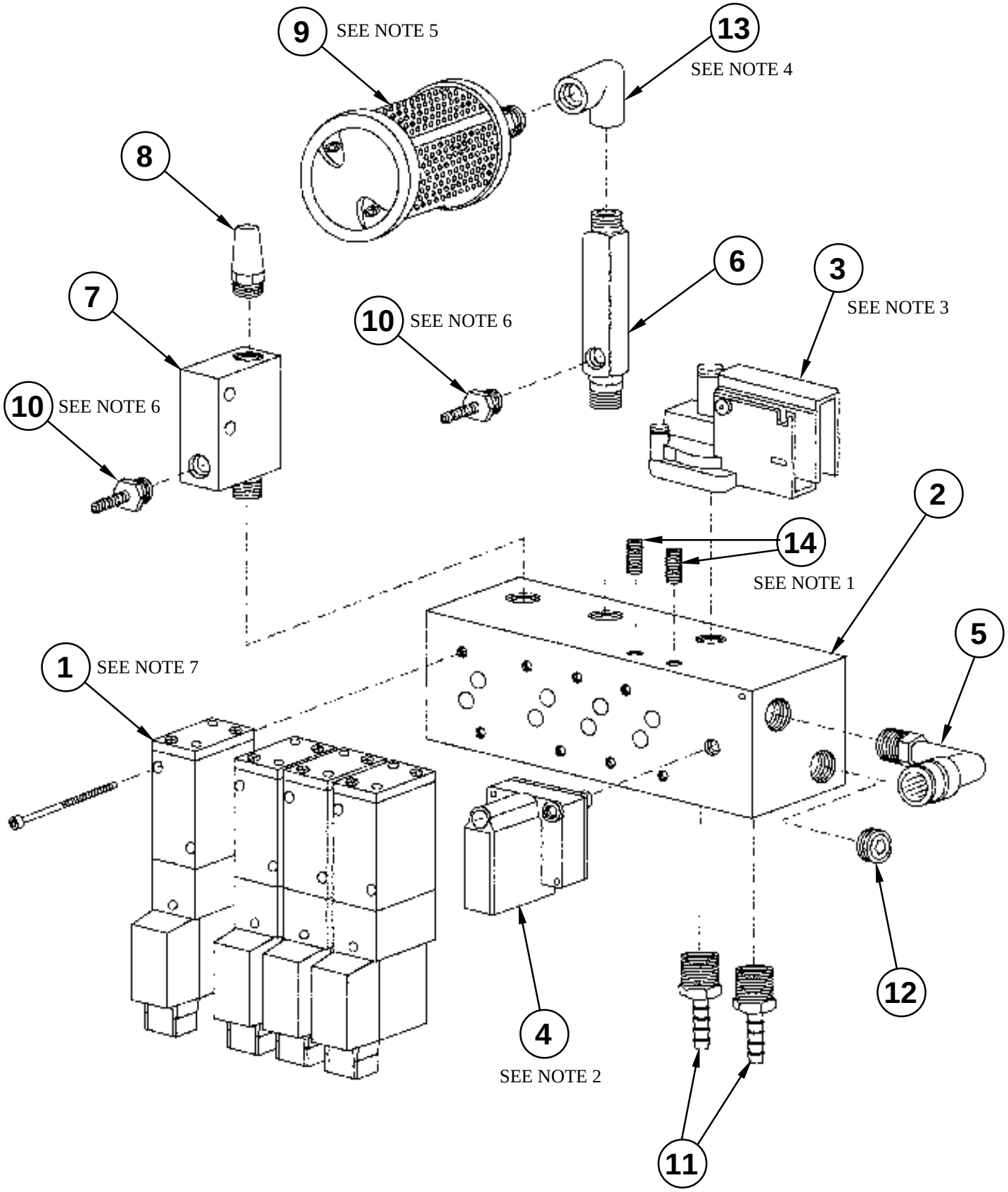

DOUBLE DIFFUSER

Manifold Exploded View - Parts List

	Description	Qty.	Location	Part Number
1.	3-way Solenoid Valves	4	10E17	9001.11.007
2.	Manifold Block	1	10E22	0101.02.108
3.	Low Pressure Sensor	1	16D29	TC3-03
4.	Low Pressure Switch	1	10A61	0100.01.126
5.	3/8” Plug to 1/4” NPT Swivel Elbow	1	10E25	9001.03.012
6.	Nozzle Vacuum Pump	1	2B97	HAV-128
7.	Probe Vacuum Pump	1	1D97	AVR093H
8.	Nozzle Muffler	1	5D33	S18
9.	Probe Muffler	1	5D33	S1FZ
10.	1/8” NPT to 3/16” Barb	2	5E81	9001.00.049
11.	1/4” Barb to 1/4” NPT	2	16D109	9001.00.013
12.	1/4” NPT Pipe Plug	1	_____	9001.00.003
13.	1/4” NPT Street Elbow	1	12E167	12760
14.	1/4 - 20 x 7/8” Set Screws	2	_____	_____

NOTES: Refer To Drawing

1. *These two screws must be installed before part #3 and taped with teflon tape the entire screw. Do not screw in flush, leave 1/4” of screw protruding from manifold.*
2. *Part #4 must be installed before part #1.*
3.
4. *Tap one end to 1/4” NPS.*
5. *Tap muffler to 1/4: NPT.*
6. *Install after mounting #6 to manifold.*
7. *Order of installation = #14, #3, #7 then #6.*

DOUBLE DIFFUSER

Cover - External Assembly

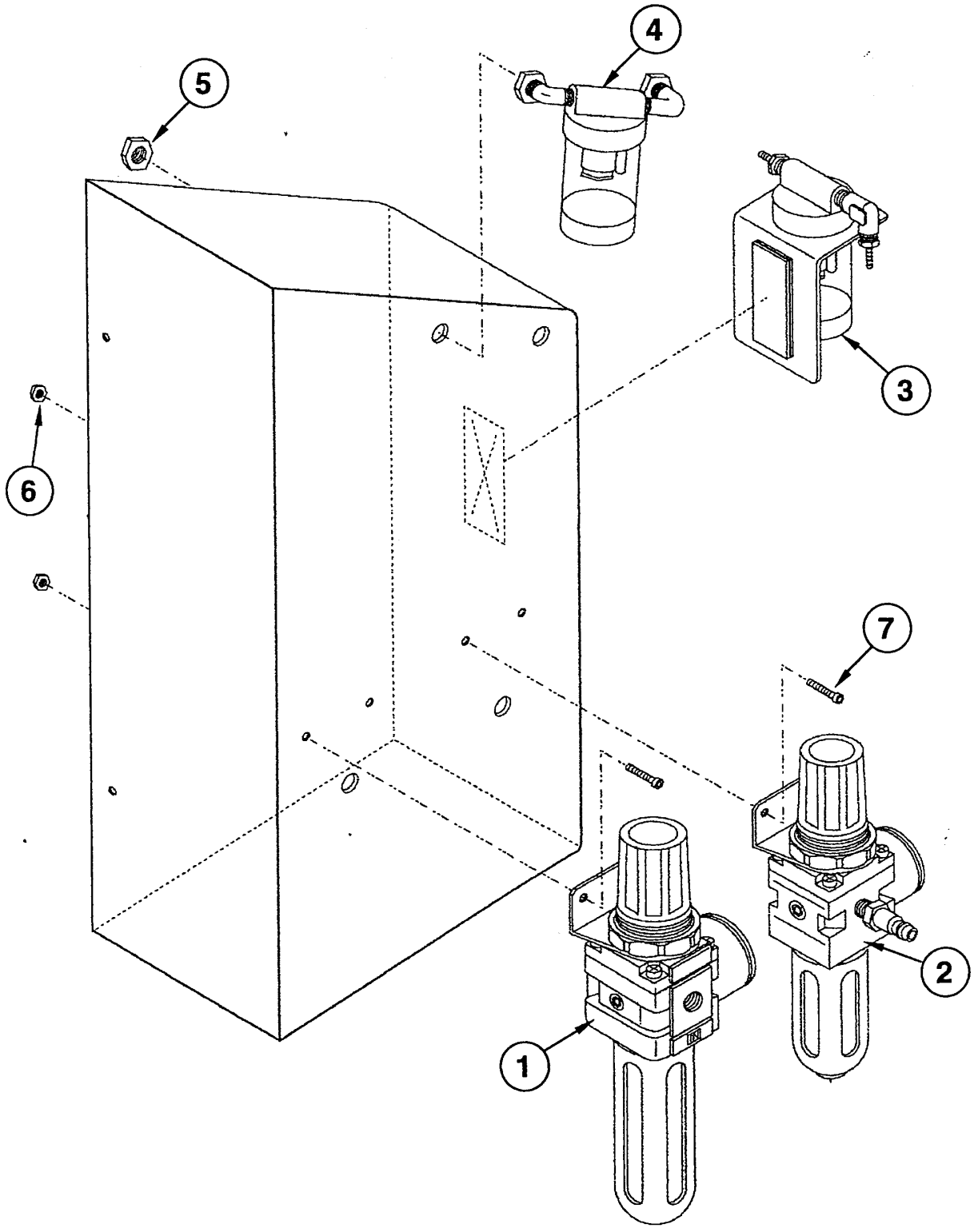

DOUBLE DIFFUSER

Cover, External Assembly - Parts List

	Description	Qty.	Location	Part Number
1.	Diffuser Regulator (1/4" NPT) with 0-160 gauge	1	10E9	9001.12.004
2.	Nozzle Regulator (1/8" NPT) with 0-160 gauge	1	10E13	9001.12.003
3.	Probe Filter Assembly	1	N/A	1010.00.010
4.	Vacuum Filter Assembly	1	17A82	N/A
5.	Nut, Bulkhead	1	11A57	12710-1
6.	Nut, 10-32	4	_____	_____
7.	Screw, 10-32 x 1/2" Socket Head Cap	4	_____	_____

DOUBLE DIFFUSER

Diffuser Regulator - Sub Assembly

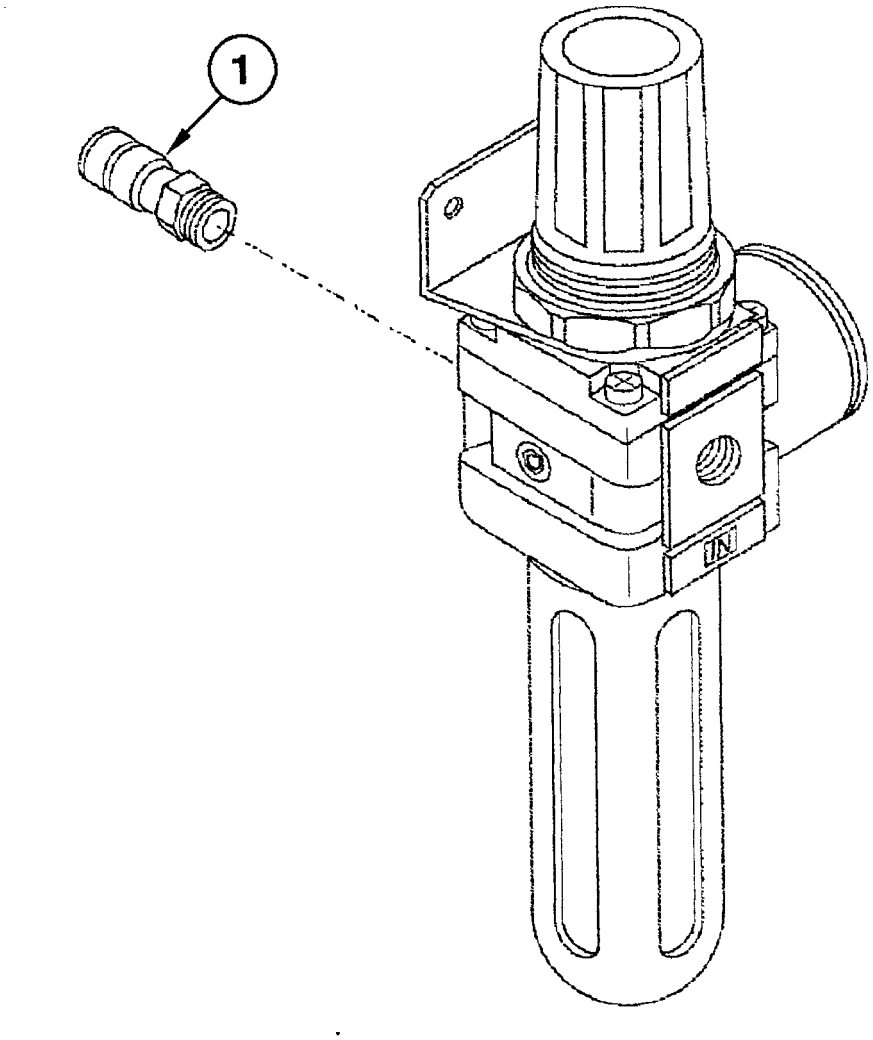

DOUBLE DIFFUSER

Diffuser Regulator - Parts List

	Description	Qty.	Location	Part Number
1.	1/4” NPT - 3/8” Plug Straight Fitting	1	10E26	9001.03.013

DOUBLE DIFFUSER

Nozzle Regulator - Sub-Assembly

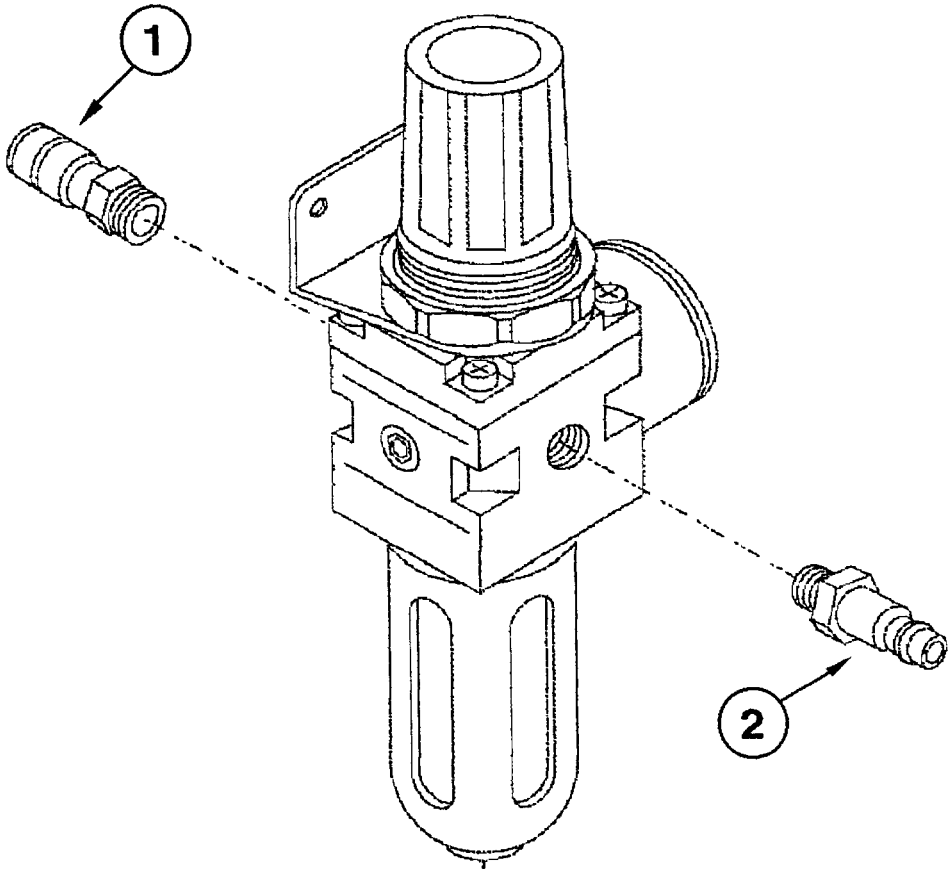

DOUBLE DIFFUSER

Nozzle Regulator - Parts List

	Description	Qty.	Location	Part Number
1.	1/8” NPT to 1/4” Straight Fitting	1	14A93	FLX335
2.	Euro Quick Disconnect male 1/8” NPT	1	16D77	TC3-27

DOUBLE DIFFUSER

Cover, Flow Sensor - Assembled View

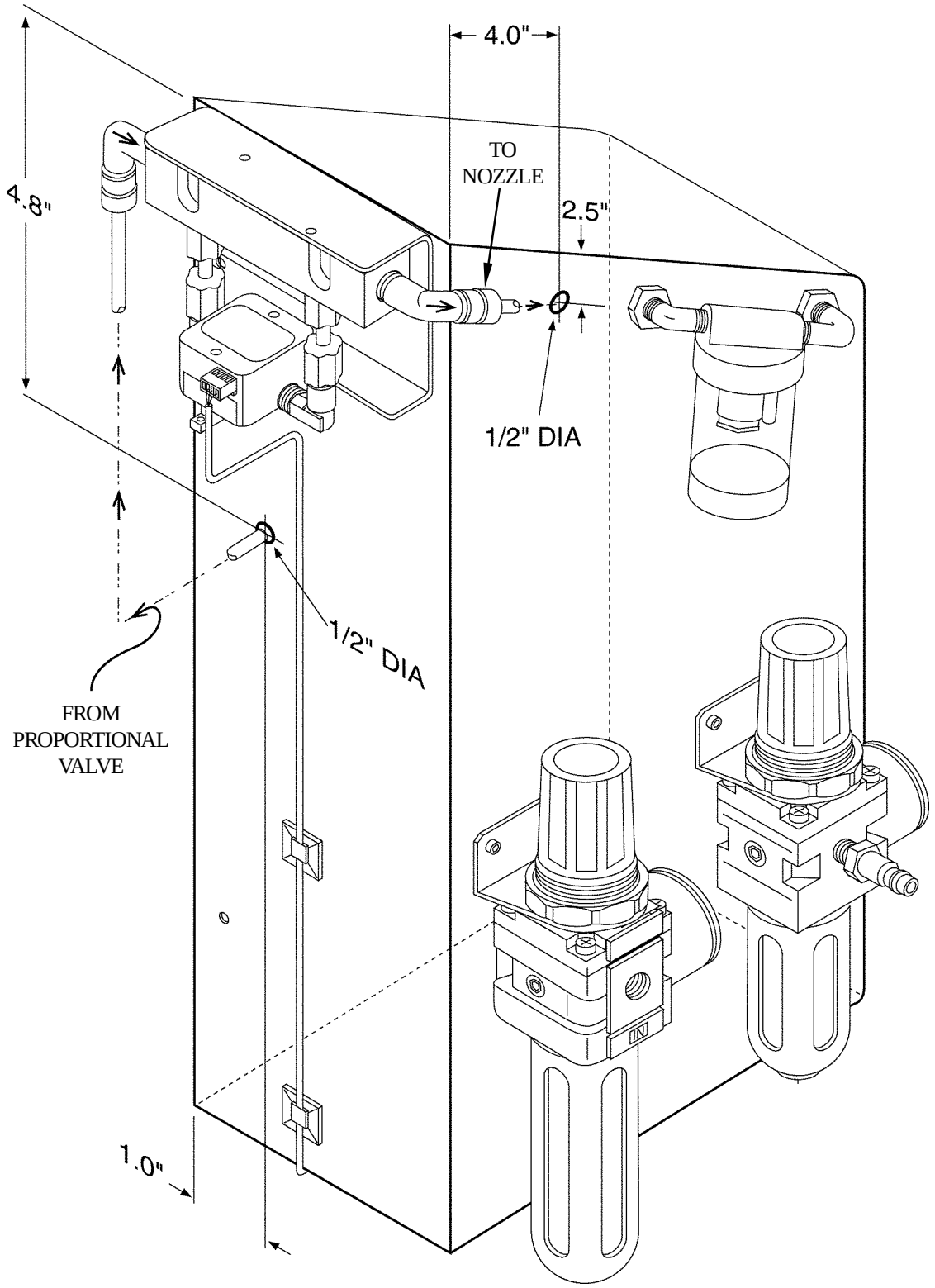

DOUBLE DIFFUSER

Cover - Flow Sensor Installation

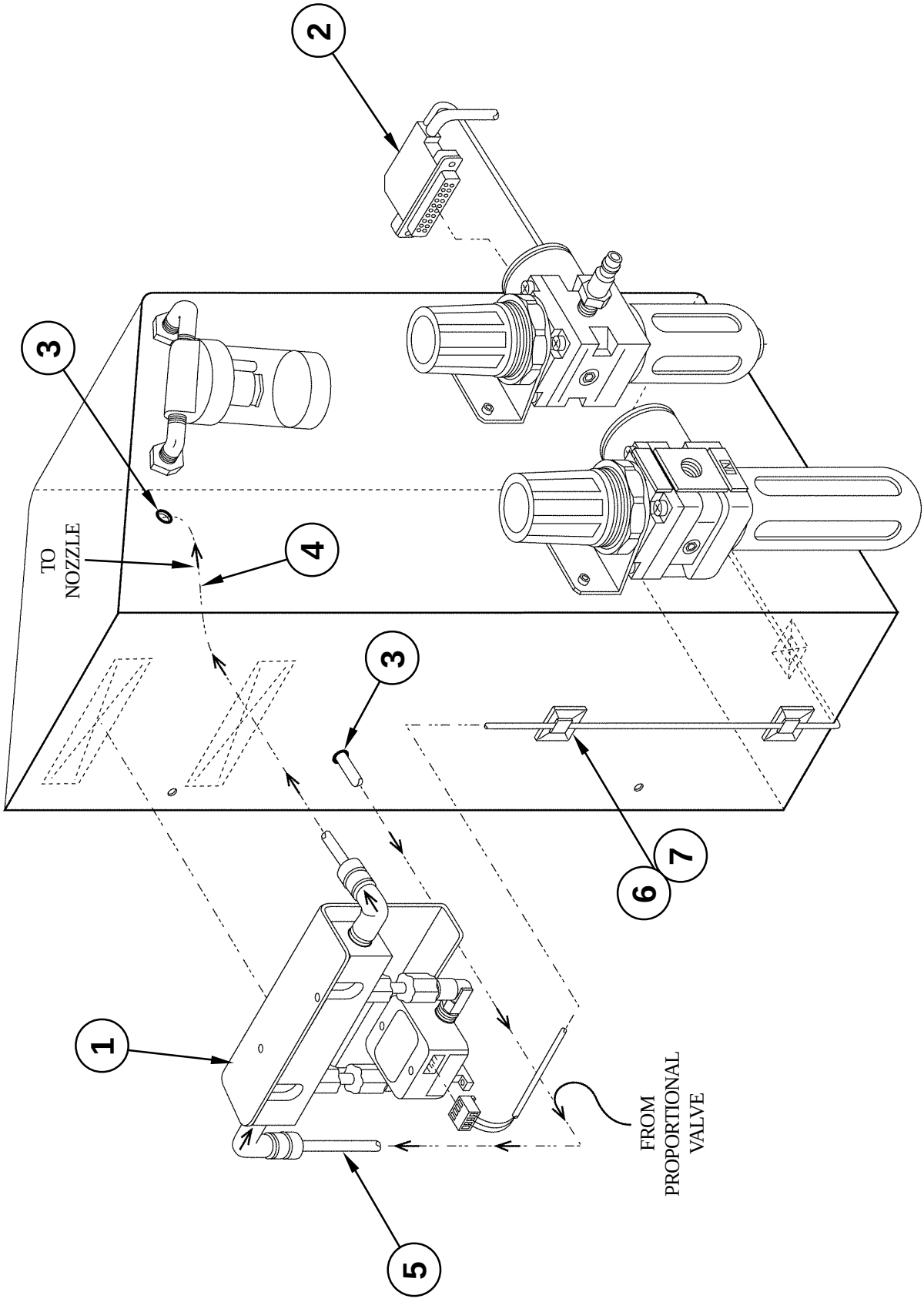

DOUBLE DIFFUSER

Cover, Flow Sensor Installation - Parts List

	Description	Qty.	Location	Part Number
1.	Flow Sensor	1	18B62	9002.12.020
2.	Cable, Flow Sensor	1	18B62	0110.02.041
3.	Grommet, 3/8” dia.	2	16D107	TC3-16
4.	Tube, 3/8” dia.	10”	16C1	9001.15.008
5.	Tube, 3/8” dia.	10”	16C1	9001.15.008
6.	Wire Tie Mounts	4	_____	9002.02.012
7.	Wire Ties	4	_____	9002.02.009

DIFFUSER

Flow Sensor- Sub Assembly

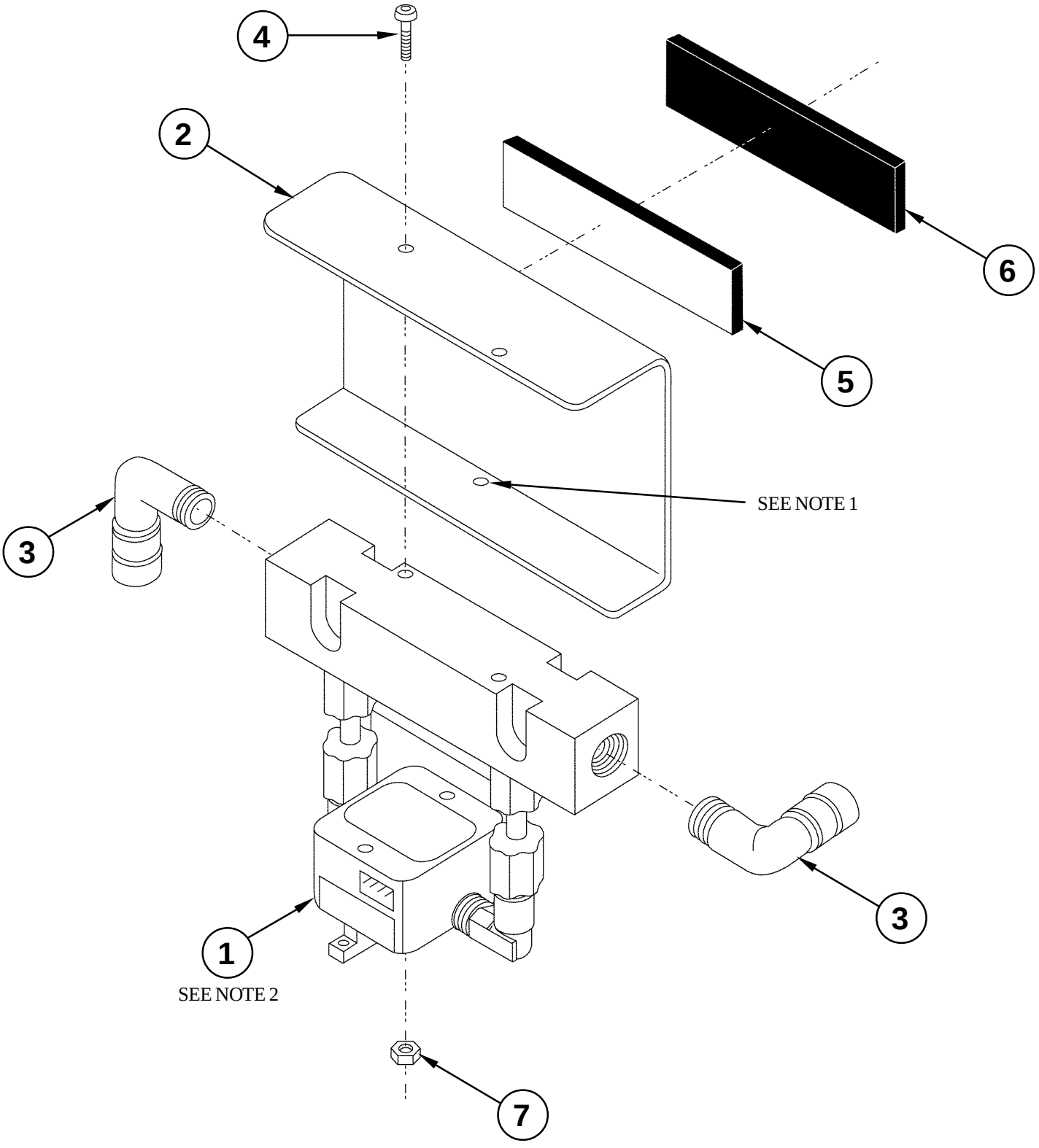

DIFFUSER

Flow Sensor Sub Assembly - Parts List

	Description	Qty.	Location	Part Number
1.	Flow Sensor	1	18B62	9002.12.020
2.	Flow Sensor Bracket	1	18B61	0110.02.100
3.	3/8” NPT to 3/8” Plug-In Fitting	2	18B59	9001.03.018
4.	Screw, 6-32 x 1 1/4” Button HD	2	8A	_____
5.	Hook	2	16D1	TC3-41
6.	Loop	2	16D9	TC3-42
7.	Nut, 6-32	2	8B	_____

NOTES:

1. Use existing screw and nut supplied with Flow Sensor.
2. Sensor must be turned, as shown, horizontal to mount to bracket.
3. All threads of fittings to have teflon tape.

FLOW SENSOR

Cable Assembly A (0110.02.041) - Parts List

	Description	Qty.	Location	Part Number
1.	Cable, 40-Pin	1	16C81	TC3-30C
2.	Wire, Red 24 AWG	28”	_____	_____
3.	Wire, Black 24 AWG	28”	_____	_____
4.	Wire, White 24 AWG	28”	_____	_____
5.	Plug, 4-Pin	1	_____	9002.13.098
6.	Pins	4	_____	9002.13.099
7.	Wire Sheathing	26”	_____	9002.02.072
8.	Shrink Tube, 1/8” dia.	2 x1”	13C34	9002.00.056

Assembly Steps

1. Remove strain relief cover from RS-232 end of 40-pin cable. Be certain of covers orientation for reinstalling.

2. Splice red wire to white wire #37 in cable.
   Splice white wire to red wire #3 in cable.
   Splice black wire to gray wire #35 in cable.
   *Cover all splices with heat shrink.

3. Cover wire with sheathing. Use heat shrink tube over ends.

4. Run wires under grommet in cable.

5. Crimp pins to wires.

6. Install plug:

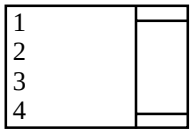

#1 Black wire
#2 White wire
#3 Red wire

7. Replace strain relief cover.

DRS22 SINGLE DIFFUSER

Heater, Electrical & Air (0100.01.048) - Exploded View

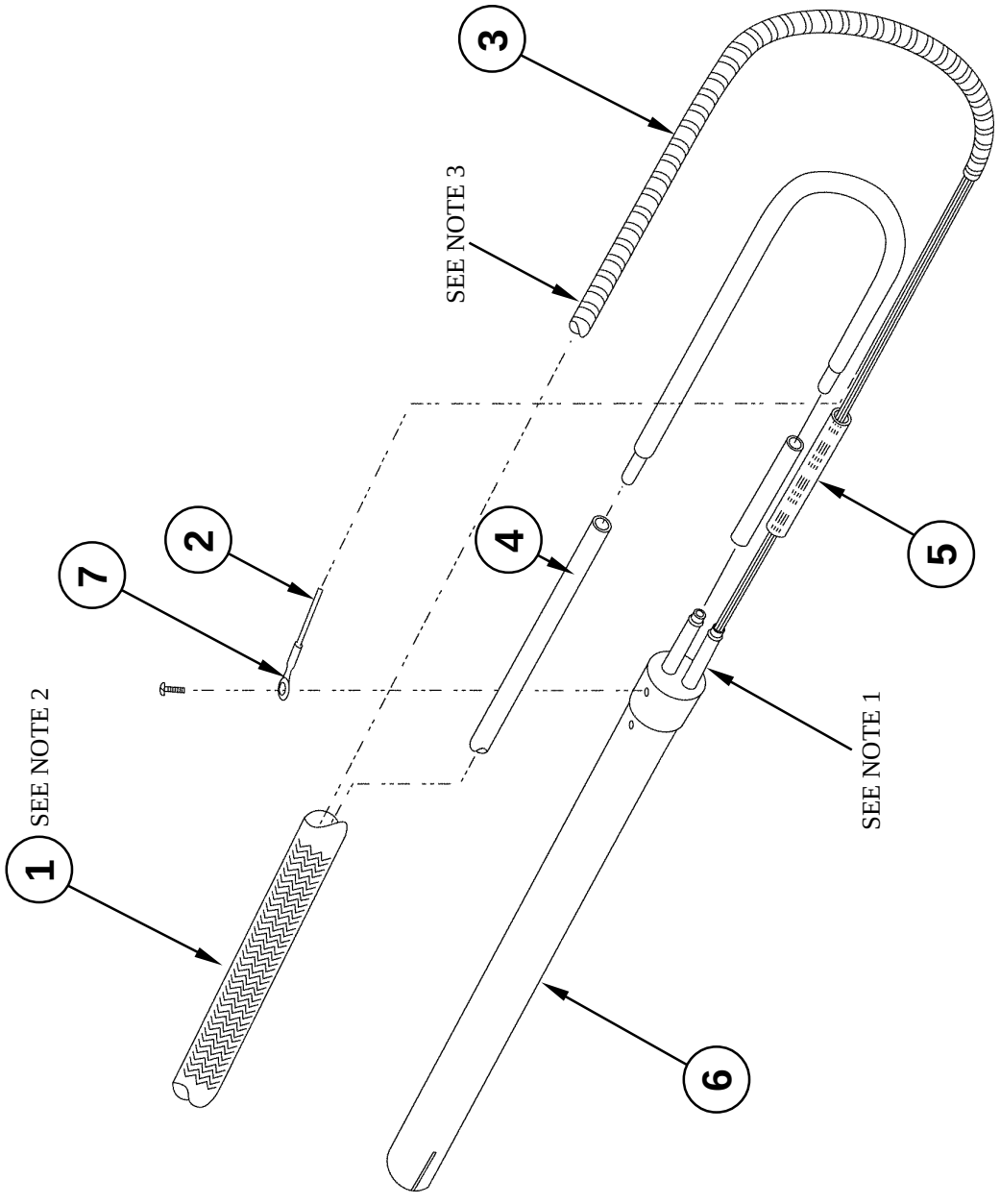

DRS22 SINGLE DIFFUSER

Heater, Electrical & Air - Parts List

	Description	Qty.	Location	Part Number
1.	Wire Sheathing - DRS-22 Single - Cut 52”	1	13C5	9002.00.064
2.	Ground Wire 18 awg, green 81” with Ring Connector 28-22 AWG	1	_____	_____
3.	Stainless Steel Conduit - DRS-22 Single - Cut 57”	1	10C9	0100.01.117
4.	Clear Tube - DRS-22 Single - Cut 29”	1	16C17	TC3-14
5.	3/8” x 1.5 Shrink Tube	1	_____	_____
6.	2000 Watt Heater	1	10E49	0100.01.120
7.	Ring Connector	1	_____	_____

NOTES: Refer To Drawing

1. *Use 4” black wire tie to secure sheathing to heater.*
2. *Cut sheathing in a relaxed state. Do not stretch it out to cut or the assembly length will come up short. After cutting, fuse the cut ends from freighing by melting the ends with a solder iron.*
3. *Cut S.S. conduit in circular cut off saw. Remove all burrs on the inside of conduit as well as outside. This is very important or the burrs will cut into heater wires.*

DRS22

Camera - Assembly & Installation

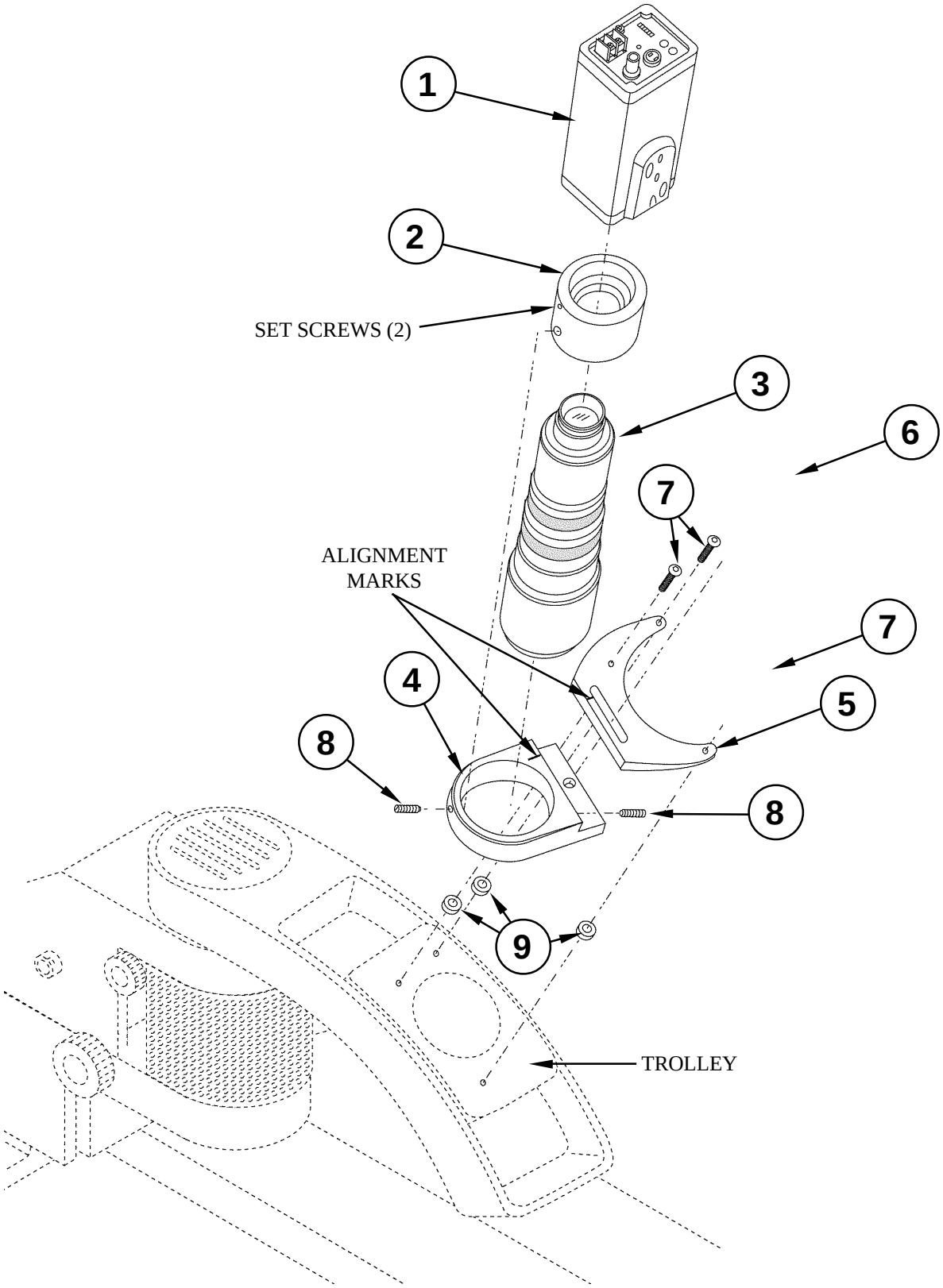

DRS22

Camera - Parts List

	Description	Qty.	Location	Part Number
1.	Camera, 222	1	16A17	1001.00.104
2.	Camera Mount Ring	1	16A69	1001.00.103
3.	Zoom Lens, Camera	1	16A1	1001.00.105
4.	Mount Bracket	1	16A74	1001.00.102
5.	Mount Bracket Arm	1	16A65	1001.00.101
6.	5/16”-18 x 3/8”-3/8” Shoulder Screw	1	17A103	_____
7.	Screw, M4 x 20 Button HD	3	57B	_____
8.	Plunger	2	16A73	9001.00.057
9.	Grommets	4	17B22	1001.00.110

DRS22 SINGLE DIFFUSER

Flow Sensor - Assembled View

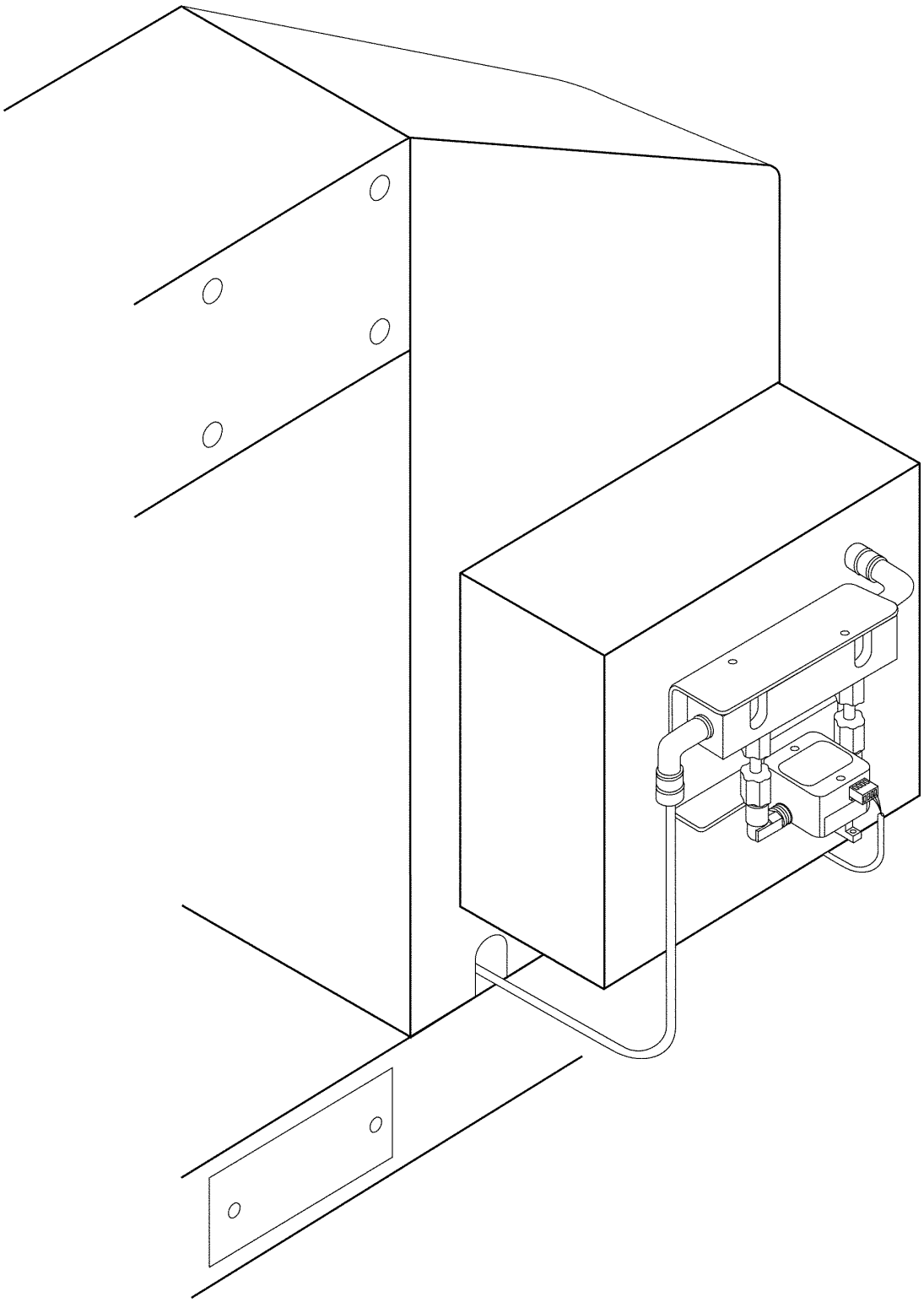

DRS22 SINGLE DIFFUSER

Flow Sensor Installation

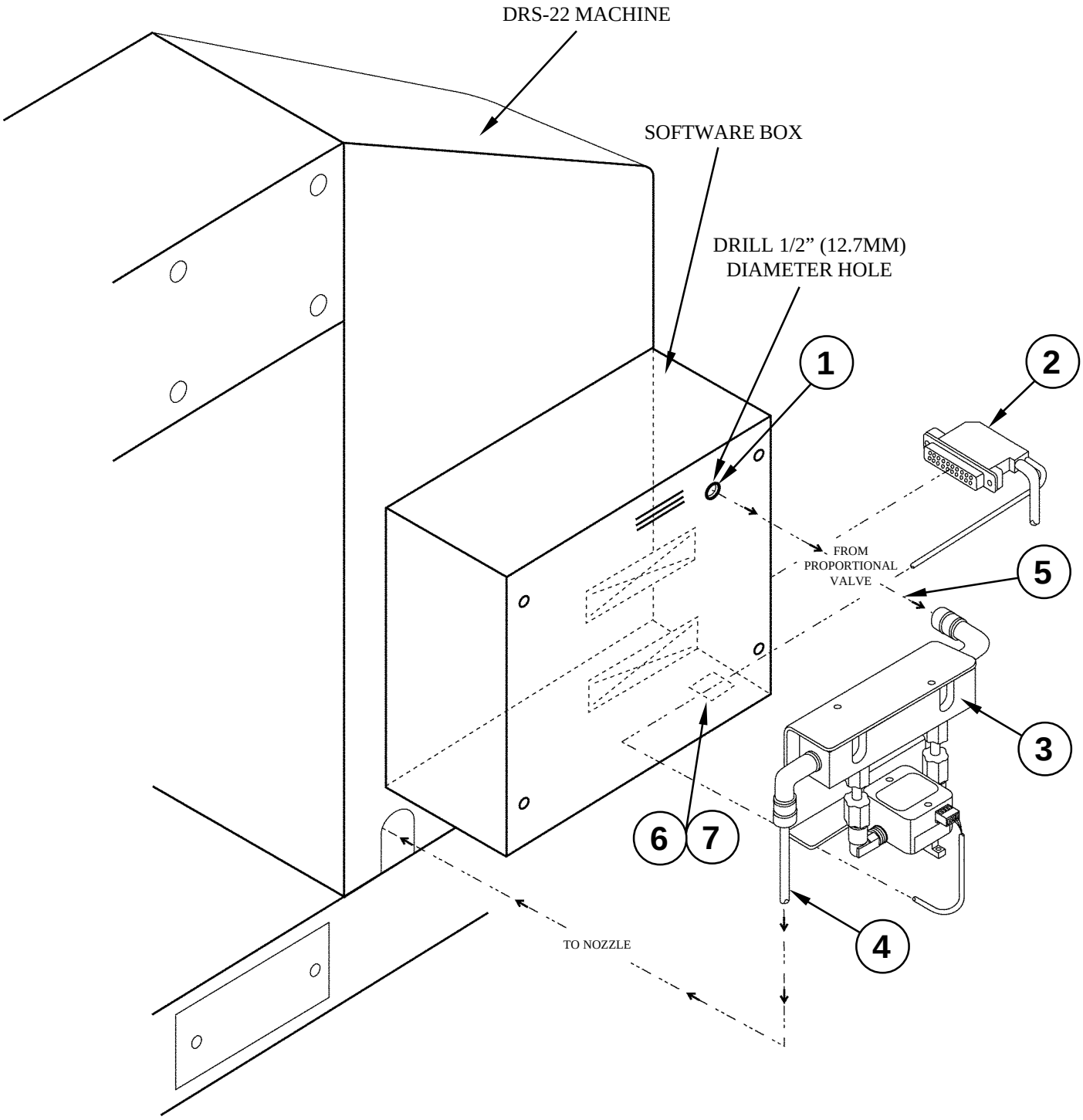

DRS22 SINGLE DIFFUSER

Flow Sensor Installation - Parts List

	Description	Qty.	Location	Part Number
1.	Grommet, 3/8” dia.	1	16D107	TC3-16
2.	Cable, 40-Pin	1	18B62	0110.02.041
3.	Flow Sensor	1	18B62	9002.12.020
4.	Tube, 3/8” dia. with	19”	16C1	9001.15.008
	- Double Barb	1	16D74	TC3-26
5.	Tube, 3/8” dia.	4”	16C1	9001.15.008
6.	Wire Tie Mounts	4	_____	9002.02.012
7.	Wire Ties	4	_____	9002.02.009
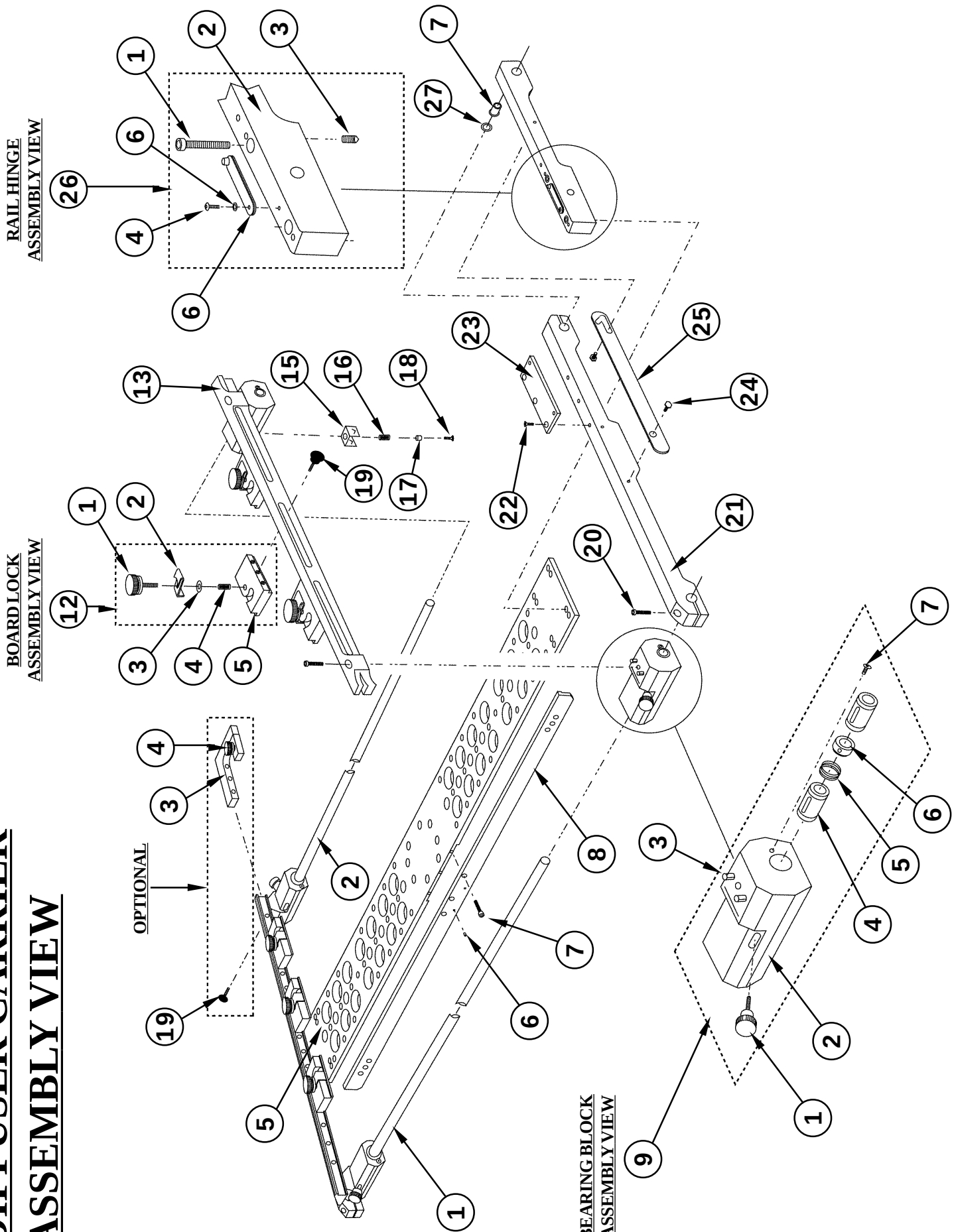
DIFFUSER CARRIER ASSEMBLY VIEW